TOWN OF YARROW POINT

KING COUNTY **WASHINGTON**

CONTRACT PROVISIONS

for

NE 42ND STREET/91ST AVENUE NE STORMWATER AND UGC PROJECT

G&O #19456
AUGUST 2019

Gray & Osborne, Inc.
CONSULTING ENGINEERS

TOWN OF YARROW POINT

KING COUNTY **WASHINGTON**

CONTRACT PROVISIONS

for

NE 42ND STREET/91ST AVENUE NE STORMWATER AND UGC PROJECT

G&O #19456
AUGUST 2019

Gray & Osborne, Inc.
CONSULTING ENGINEERS

CALL FOR BIDS

TOWN OF YARROW POINT

NE 42ND STREET/91ST AVENUE NE STORMWATER AND UGC PROJECT

Sealed Proposals will be received by the undersigned at the Town of Yarrow Point, 4030 95th Avenue NE, Yarrow Point, Washington 98004, up to **[TIME]**; local time on **[DATE]**, for furnishing the necessary labor, materials, equipment, tools, and guarantees thereof to construct the NE 42nd Street/91st Avenue NE Stormwater and UGC Project.

This project consists of removing and replacing the existing storm drainage pipe on NE 42nd Street with a new 24-inch diameter storm pipe along with undergrounding the existing aerial utilities on both NE 42nd Street and 91st Avenue NE. This project also includes installation of the catch basins and utility provided vaults, pedestals and hand holes, clearing and grubbing, pavement restoration, surface restoration, traffic control, erosion control, all in accordance with the Contract Plans, these Contract Provisions, and the Standard Specifications.

The Work shall be physically complete within 60 working days after the commencement date stated in the Notice to Proceed. All bidding and construction is to be performed in compliance with the Contract Provisions and Contract Plans for this project and any addenda issued thereto that are on file at the office of the Town Clerk, Town Hall, Yarrow Point, Washington.

The Proposals will be publicly opened and read aloud shortly after the time and date stated above. Proposals are to be submitted only on the form provided with the Bid Documents. All Proposals must be accompanied by a certified check, postal money order, cashiers check, or Proposal bond payable to the "Town of Yarrow Point" and in an amount of not less than five percent (5%) of the total Proposal amount.

Bid Documents for this project are available free-of-charge at the following website: http://gobids.grayandosborne.com. Bidders are encouraged to register in order to receive automatic email notification of future addenda and to be placed on the Bidders List. For assistance, please call (206) 284-0860. Contract questions shall be directed only to the office of the Project Engineer.

Financing of the Project has been provided by Town of Yarrow Point, Washington. The Town of Yarrow Point expressly reserves the right to reject any or all Proposals and to waive minor irregularities or informalities and to Award the Project to the lowest responsive, responsible bidder as it best serves the interests of the Town.

(Signed) **AUSTEN WILCOX**
DEPUTY CLERK

CONTRACT PROVISIONS

TABLE OF CONTENTS

TOWN OF YARROW POINT

NE 42ND STREET/91ST AVENUE NE STORMWATER AND UGC PROJECT

PAGE NO.

PART 7. APPENDIX

Appendix A – Supplemental Bidder Responsibility Criteria Forms
Appendix B – Property Release
Appendix C – Utility Provided Structures

PART 1

BID DOCUMENTS

BIDDER'S CHECKLIST

1. REQUIRED FORMS

The Bidder shall submit the following forms, which must be executed in full and submitted with the Proposal.

a.	Proposal (including Statement of Bidder's Qualifications)	(Pages P-1 - P-9)
b.	Bid Deposit or Proposal Bond	(PB-1)

2. SUPPLEMENTAL BIDDER CRITERIA

The Apparent two lowest bidders shall submit to the Contracting Agency the completed Supplemental Bidder Criteria forms in the Appendix by noon of the second business day following the bid submittal deadline.

3. AGREEMENT FORMS

The following forms (a., b., and c.) are to be executed and the following Certificates of Insurance (d. and e.) are to be provided after the Contract is awarded and prior to Contract execution.

a.	Agreement	(Pages A-1 - A-3)
b.	Performance Bond	(Page B-1)
c.	Public Works Payment Bond	(Page B-2)
d.	Certificate of Insurance	
e.	Certificate of Builders Risk Insurance	

NE 42ND STREET/91ST AVENUE NE
STORMWATER AND UGC PROJECT

PROPOSAL

Town of Yarrow Point
4030 95th Avenue NE
Yarrow Point, Washington 98004

The undersigned has examined the Work site(s), local conditions, the Contract, and all applicable laws and regulations covering the Work. The following unit and lump sum prices are tendered as an offer to perform the Work in accordance with all of the requirements set forth in the Contract and all applicable laws and regulations.

As required by the Contract, a postal money order, certified check, cashier's check or Proposal bond made payable to the Owner is attached hereto. If this Proposal is accepted and the undersigned fail(s) or refuse(s) to enter into a contract and furnish the required performance bond, labor and material payment bond, special guarantee bonds (if required), required insurance and all other required documentation, the undersigned will forfeit to the Owner an amount equal to five percent of the Proposal amount.

After the date and hour set for submitting the Proposals, no bidder may withdraw its Proposal, unless the Award of the contract is delayed for a period exceeding 60 consecutive calendar days.

The undersigned agrees that in the event it is Awarded the contract for the Work, it shall employ only Contractors and Subcontractors that are duly licensed by the State of Washington and remain so at all times they are in any way involved with the Work.

The undersigned agrees that the Owner reserves the right to reject any or all Proposals and to waive any minor irregularities and informalities in any Proposal.

The undersigned agrees that the Owner will Award all schedules of work to the lowest responsible, responsive bidder whose Proposal is in the best interest of the Owner.

PROPOSAL - Continued

NO.	ITEM	QUANTITY		UNIT PRICE	AMOUNT
1.	Minor Change (1-04.4(1))	1	CALC	$10,000.00	$10,000.00
2.	Record Drawings (Min. Bid $1,000) (1-05.18)	1	LS	$_____	$_____
3.	SPCC Plan (1-07.15(1))	1	LS	$_____	$_____
4.	Mobilization, Cleanup and Demobilization (1-09.7)	1	LS	$_____	$_____
5.	Project Temporary Traffic Control (1-10.5(1))	1	LS	$_____	$_____
6.	Clearing and Grubbing (2-01.5)	1	LS	$_____	$_____
7.	Removal of Structures and Obstructions (2-02.5)	1	LS	$_____	$_____
8.	Locate Existing Utilities (2-09.5)	1	LS	$_____	$_____
9.	Pothole (2-09.5)	30	EA	$_____	$_____
10.	Controlled Density Fill (2-09.5)	20	CY	$_____	$_____
11.	Crushed Surfacing Top Course (4-04.5)	350	TN	$_____	$_____
12.	Temporary HMA (5-04.5)	100	TN	$_____	$_____
13.	Commercial HMA (5-04.5)	590	TN	$_____	$_____
14.	PVC Storm Sewer Pipe, 8 In. Diam. (Incl. Bedding) (7-04.5)	90	LF	$_____	$_____
15.	PVC Storm Sewer Pipe, 24 In. Diam. (Incl. Bedding) (7-04.5)	810	LF	$_____	$_____
16.	Television Inspection (7-04.5)	1	LS	$_____	$_____
17.	Catch Basin, Type 1 (7-05.5)	8	EA	$_____	$_____
18.	Catch Basin, Type 2, 48 In. Diam. (7-05.5)	6	EA	$_____	$_____
19.	Adjust Catch Basin on 92nd Avenue NE (7-05.5)	1	LS	$_____	$_____

PROPOSAL - Continued

NO.	ITEM	QUANTITY		UNIT PRICE	AMOUNT
20.	Removal of Unsuitable Material (Trench) (7-08.5)	10	CY	$_____	$_____
21.	Trench Excavation Safety Systems (7-05.5)	1	LS	$_____	$_____
22.	Bank Run Gravel for Trench Backfill (7-05.5)	1,800	TN	$_____	$_____
23.	Erosion/Water Pollution Control (8-01.5)	1	LS	$_____	$_____
24.	Property Restoration (8-02.5)	1	FA	$10,000.00	$10,000.00
25.	Topsoil, Type A (8-02.5)	50	CY	$_____	$_____
26.	Sod Installation (8-02.5)	100	SY	$_____	$_____
27.	Bark or Wood Chip Mulch (8-02.5)	50	CY	$_____	$_____
28.	Irrigation System (8-03.5)	1	LS	$_____	$_____
29.	Cement Concrete Driveway Repair (8-06.5)	10	SY	$_____	$_____
30.	Remove, Protect and Reinstall Mailbox Pagoda (8-18.5)	1	EA	$_____	$_____
31.	Permanent Signing (8-21.5)	1	LS	$_____	$_____
32.	Resolution of Utility Conflicts for Joint Utility Trench (8-50.5)	1	FA	$10,000.00	$10,000.00
33.	Franchise Utility Coordination (8-50.5)	1	LS	$_____	$_____
34.	Joint Utility Trench, 18 In. – 24 In. Wide (8-50.5)	410	LF	$_____	$_____
35.	Joint Utility Trench, 30 In. – 36 In. Wide (8-50.5)	1,580	LF	$_____	$_____
36.	Joint Utility Trench, 42 In. – 48 In. Wide (8-50.5)	80	LF	$_____	$_____

PROPOSAL - Continued

NO.	ITEM	QUANTITY		UNIT PRICE	AMOUNT
37.	Shoring Franchise Utility (8-50.5)	1	LS	$_____	$_____
38.	Install Conduit, 2 In. Diam. – PSE (8-50.5)	280	LF	$_____	$_____
39.	Install Conduit, 3 In. Diam. – PSE (8-50.5)	1,285	LF	$_____	$_____
40.	Install Conduit, 4 In. Diam. – PSE (8-50.5)	4,240	LF	$_____	$_____
41.	Install Conduit, 2 In. Diam. – CenturyLink (8-50.5)	1,260	LF	$_____	$_____
42.	Install Conduit, 4 In. Diam. – CenturyLink (8-50.5)	2,570	LF	$_____	$_____
43.	Install Conduit, 2 In. Diam. – Comcast (8-50.5)	760	LF	$_____	$_____
44.	Install Conduit, 4 In. Diam. – Comcast (8-50.5)	1,720	LF	$_____	$_____
45.	Conduit Pipe, 2 In. Diam. – Yarrow Point (8-50.5)	1,600	LF	$_____	$_____
46.	Conduit Pipe, 4 In. Diam. – Yarrow Point (8-50.5)	1,600	LF	$_____	$_____
47.	Install Utility Structure, PSE, Junction Box (8-50.5)	4	EA	$_____	$_____
48.	Install Utility Structure, PSE, Transformer (8-50.5)	5	EA	$_____	$_____
49.	Install Utility Structure, PSE, Handhole (8-50.5)	12	EA	$_____	$_____
50.	Install Utility Structure, CenturyLink, Handhole (8-50.5)	14	EA	$_____	$_____
51.	Install Utility Structure, CenturyLink, Vault (8-50.5)	8	EA	$_____	$_____

PROPOSAL - Continued

NO.	ITEM	QUANTITY		UNIT PRICE	AMOUNT
52.	Install Utility Structure, Comcast, Vault (8-50.5)	15	EA	$_____	$_____
53.	Install Utility Structure, Comcast, Shutter Box (8-50.5)	7	EA	$_____	$_____
54.	Junction Box – Yarrow Point (8-50.5)	5	EA	$_____	$_____

Subtotal: ..... $_____

Washington State Sales Tax (10%): ..... $_____

TOTAL CONSTRUCTION COST: ..... $_____

Note: A bid must be received on all items.

STATEMENT OF BIDDER'S QUALIFICATIONS

Name of Firm: _____

Address: _____

Telephone No. _____ Fax No. _____

Contact Person for this Project: _____

E-mail: _____

Number of years the Contractor has been engaged in the construction business under the present firm name, as indicated above:

_____

WORK TO BE COMPLETED BY BIDDER

List the Work and the dollar amount thereof that the Bidder will complete with its forces, if awarded the contract.

Work to be Performed	Dollar Amount

PROPOSED SUBCONTRACTORS (Per RCW 39.30.060)

For Proposals exceeding one million dollars, indicate who (either the Contractor submitting this bid or a subcontractor) will be completing the work for each of the three categories listed below. Information shall include their Washington State Department of Licensing Contractor's Registration No. This information shall be provided with the Proposal or within one hour after the published Proposal submittal time in accordance with RCW 39.30.060.

Work to be Performed	Subcontractor or Prime (Name and Registration Number)
Heating, Ventilation and Air Conditioning	
Plumbing	
Electrical	

ADDENDA RECEIVED

Addendum No.	Date Received	Name of Recipient

NOTE: Bidder shall acknowledge receipt of all addenda. Bidder is responsible for verifying the actual number of addenda issued prior to submitting a Proposal.

Subject to any extensions of the Contract time granted under the Contract, the undersigned agrees to substantially complete the Work required under this Contract within 50 working days (the Substantial Completion Date) and to physically complete the Work required under this contract within 60 working days (the Physical Completion Date) from when Contract Time begins.

The undersigned has reviewed and fully understands the provisions in the Contract regarding liquidated damages and agrees that liquidated damages shall be $1,000.00 per day for each and every working day beyond the Contract time allowed for substantial completion until the Substantial Completion Date is achieved and $500.00 for each and every working day required beyond the Contract Time for physical completion until the Physical Completion Date is achieved.

The undersigned is, and will remain in, full compliance with all Washington State administrative agency requirements including, but not limited to registration requirements of Washington State

Department of Labor & Industries for contractors, including but not limited to requirements for bond, proof of insurance and annual registration fee. The undersigned's Washington State:

Dept. of Labor and Industries Workman's Compensation Account No. is _____;
Dept. of Licensing Contractor's Registration No. is _____;
Unified Business Identifier Number is _____;
Excise Tax Registration Number is _____; and
Employment Security Account Number is _____.

The undersigned has reviewed all insurance requirements contained in the Contract and has verified the availability of and the undersigned's eligibility for all required insurance. The undersigned verifies that the cost for all required insurance, has been included in this Proposal.

In relation to claims related in whole or in part to workplace injuries to employees, the undersigned waives any immunity granted under the State Industrial Insurance Law, RCW Title 51. This waiver has been specially negotiated by the parties, which is acknowledged by the undersigned in signing this Proposal.

By signing the proposal, the undersigned declares, under penalty of perjury under the laws of the United States and the State of Washington, that the following statements are true and correct:

1. That the undersigned person(s) or entity(ies) has(have) not, either directly or indirectly, entered into any agreement, participated in any collusion, or otherwise taken any action in restraint of free competitive bidding in connection with the project for which this Proposal is submitted.

2. The bidder hereby certifies that, within the three-year period immediately preceding the bid solicitation date (**INSERT 1ST AD DATE**), that the bidder is not a "willful" violator, as defined in RCW 49.48.082, of any provision of chapters 49.46, 49.48, or 49.52 RCW, as determined by a final and binding citation and notice of assessment issued by the Department of Labor and Industries or through a civil judgment entered by a court of limited or general jurisdiction.

PROPOSAL - Continued

The undersigned agrees that the Owner is authorized to obtain information from all references included herein.

Sincerely,

_____ _____
Sign Name Date

By: _____ _____
Print Name, Title Location Executed (City, State)

_____
Print Company Name

Amount of Proposal deposit: $_____ Check No. _____,

or Proposal bond in the amount of $_____

_____, issued through _____
Name of Bank/Bonding Company

located at _____
Mailing Address

_____
Telephone Number of Bank/Bonding Company

PROPOSAL BOND

KNOW ALL MEN BY THESE PRESENTS, That we _____

_____

of _____ as principal, and the _____

_____

a corporation duly organized under the laws of the state of _____, _____and authorized to do business in the State of Washington, as surety, are held and firmly bound unto the **TOWN OF YARROW POINT** in the full and penal sum of five percent of the total amount of the bid proposal of said principal for the work hereinafter described, for the payment of which, well and truly to be made, we bind our heirs, executors, administrators and assigns, and successors and assigns, firmly by these presents.

The condition of this bond is such, that whereas the principal herein is herewith submitting his or its sealed proposal for the following construction project, to wit:

NE 42ND STREET/91ST AVENUE NE STORMWATER AND UGC PROJECT

said bid and proposal, by reference thereto, being made a part hereof.

NOW, THEREFORE, If the said proposal bid by said principal be accepted, and the contract be awarded to said principal, and if said principal shall duly make and enter into and execute said Contract and shall furnish bond as required by the **TOWN OF YARROW POINT** within a period of 10 days from and after said award, exclusive of the day of such award, then this obligation shall be null and void, otherwise it shall remain and be in full force and effect.

IN TESTIMONY WHEREOF, The principal and surety have caused these presents to be

signed and sealed this_____day of_____, _____.

_____

_____
(Principal)

_____
(Surety)

_____
(Attorney-in-fact)

PART 2

AGREEMENT AND BONDS

AGREEMENT

THIS AGREEMENT is entered into by and between the **TOWN OF YARROW POINT** (hereinafter called the Owner) and _____ (hereinafter called the Contractor).

The Owner and the Contractor agree as follows:

ARTICLE 1. WORK.

[Include description of all schedules, alternate or additive items awarded]

ARTICLE 2. CONTRACT TIME.

The Contractor shall substantially complete the Work required by the Contract within _____ working days (the Substantial Completion Date) and physically complete the Work within _____working days (the Physical Completion Date).

ARTICLE 3. LIQUIDATED DAMAGES.

The Owner and the Contractor recognize that time is of the essence and that the Owner will suffer financial loss if the Work is not completed within the time, plus any extensions thereof, allowed in accordance with the Contract. They also recognize the inconvenience, expense, and difficulties involved in a legal proceeding to prove the actual loss suffered by the Owner if the Work is not completed within the time allowed in the Contract. Accordingly, the Owner and the Contractor agree that as liquidated damages for delay, and not as a penalty, the Contractor shall pay the Owner ($_____) per day for each working day beyond the Substantial Completion Date that the Contractor achieves substantial completion of the Work and ($_____) for each working day beyond the Physical Completion Date that the Contractor achieves physical completion of the Work.

ARTICLE 4. CONTRACT PRICE.

The Owner shall pay the Contractor the amount(s) set forth in the Proposal (in United States dollars) for completion of the Work in accordance with the Contract.

ARTICLE 5. CONTRACT.

The Contract, which comprises the entire agreement between the Owner and the Contractor concerning the Work, consists of the following:

- This Agreement;
- The Contractor's Proposal including the bid, bid schedule(s), information required of bidder, Proposal bond, and all required certificates and affidavits;
- The Performance Bond and the Public Works Payment Bond;
- The Contract Provisions, including 2018 WSDOT Standard Specification as referenced;
- The Plans (or drawings) consisting of _____ sheets, as listed in the index on sheet _____ of the Plans;
- Addenda numbers _____, inclusive; and
- Change Orders issued after the effective date of this Agreement.

There are no Contract Documents other than those listed in this Article 5. The Contract may be amended only in writing by Change Order as provided in the Contract.

ARTICLE 6. MISCELLANEOUS.

For purpose of defending any work place injury claims by employees of the Contractor and Subcontractors, the Contractor waives any immunity granted under the State Industrial Insurance Law, RCW Title 51. This waiver has been specifically negotiated between the parties and is hereby acknowledged by the Contractor. _____(Contractor's initials)

The Contractor shall not assign any rights under or interests in the Contract, including but not limited to rights to payment, without the prior written consent of the Owner. Unless specifically stated in a written consent to an assignment, no assignment will release or discharge the Contractor-assignor from any duty or responsibility under the Contract.

The Contract is binding upon the Owner and the Contractor, and their respective partners, successors, assigns and legal representatives.

IN WITNESS WHEREOF, Owner and Contractor have caused this Agreement to be executed the day and year indicated below.

TOWN OF YARROW POINT

By_____

Date_____

CONTRACTOR

License No. _____

By_____

Title_____

Attest_____

Name and Address for giving notices (print)

_____

_____

_____

PERFORMANCE BOND
to TOWN OF YARROW POINT, WA

Bond No. _____

The **TOWN OF YARROW POINT**, Washington, (Town) has awarded to _____ (Principal), a contract for the construction of the project designated as NE 42nd Street/91st Avenue NE Stormwater and UGC Project in Yarrow Point, Washington (Contract), and said Principal is required to furnish a bond for performance of all obligations under the Contract.

The Principal, and _____ (Surety), a corporation, organized under the laws of the State of _____ and licensed to do business in the State of Washington as surety and named in the current list of "Surety Companies Acceptable in Federal Bonds" as published in the Federal Register by the Audit Staff Bureau of Accounts, U.S. Treasury Dept., are jointly and severally held and firmly bound to the Town, in the sum of_____ US Dollars ($_____ **amount to include sales tax**) Total Contract Amount, subject to the provisions herein.

This statutory performance bond shall become null and void, if and when the Principal, its heirs, executors, administrators, successors, or assigns shall well and faithfully perform all of the Principal's obligations under the Contract and fulfill all the terms and conditions of all duly authorized modifications, additions, and changes to said Contract that may hereafter be made, at the time and in the manner therein specified; and if such performance obligations have not been fulfilled, this bond shall remain in full force and effect.

The Surety for value received agrees that no change, extension of time, alteration or addition to the terms of the Contract, the specifications accompanying the Contract, or to the work to be performed under the Contract shall in any way affect its obligation on this bond, and waives notice of any change, extension of time, alteration or addition to the terms of the Contract or the work performed. The Surety agrees that modifications and changes to the terms and conditions of the Contract that increase the total amount to be paid the Principal shall automatically increase the obligation of the Surety on this bond and notice to Surety is not required for such increased obligation.

This bond may be executed in two (2) original counterparts, and shall be signed by the parties' duly authorized officers. This bond will only be accepted if it is accompanied by a fully executed and original power of attorney for the officer executing on behalf of the surety.

PRINCIPAL	SURETY
_____	_____
Principal Signature Date	Surety Signature Date
_____	_____
Printed Name	Printed Name
_____	_____
Title	Title

Name, address, and telephone of local office/agent of Surety Company is:

_____

_____

_____

Approved as to form:

_____

Town Attorney, Town of Yarrow Point Date

MAY BE DELETED AT OWNER'S REQUEST

PUBLIC WORKS PAYMENT BOND
to TOWN OF YARROW POINT, WA

Bond No. _____

The **TOWN OF YARROW POINT**, Washington, (Town) has awarded to _____ (Principal), a contract for the construction of the project designated as NE 42nd Street/91st Avenue NE Stormwater and UGC Project in Yarrow Point, Washington (Contract), and said Principal is required under the terms of that Contract to furnish a payment bond in accord with Title 39.08 Revised Code of Washington (RCW) and (where applicable) 60.28 RCW.

The Principal, and _____ (Surety), a corporation organized under the laws of the State of _____ and licensed to do business in the State of Washington as surety and named in the current list of "Surety Companies Acceptable in Federal Bonds" as published in the Federal Register by the Audit Staff Bureau of Accounts, U.S. Treasury Dept., are jointly and severally held and firmly bound to the Town, in the sum of_____ US Dollars ($_____ **amount to include sales tax**) Total Contract Amount, subject to the provisions herein.

This statutory payment bond shall become null and void, if and when the Principal, its heirs, executors, administrators, successors, or assigns shall pay all persons in accordance with RCW Titles 39.08, 39.12 and 60.28 including all workers, laborers, mechanics, subcontractors, and materialmen, and all persons who shall supply such contractor or subcontractor with provisions and supplies for the carrying on of such work, and all taxes incurred on said Contract under Title 82 RCW; and if such payment obligations have not been fulfilled, this bond shall remain in full force and effect.

The Surety for value received agrees that no change, extension of time, alteration or addition to the terms of the Contract, the specifications accompanying the Contract, or to the work to be performed under the Contract shall in any way affect its obligation on this bond, except as provided herein, and waives notice of any change, extension of time, alteration or addition to the terms of the Contract or the work performed. The Surety agrees that modifications and changes to the terms and conditions of the Contract that increase the total amount to be paid the Principal shall automatically increase the obligation of the Surety on this bond and notice to Surety is not required for such increased obligation.

This bond may be executed in two (2) original counterparts, and shall be signed by the parties' duly authorized officers. This bond will only be accepted if it is accompanied by a fully executed and original power of attorney for the officer executing on behalf of the surety.

PRINCIPAL	SURETY
_____	_____
Principal Signature Date	Surety Signature Date
_____	_____
Printed Name	Printed Name
_____	_____
Title	Title

Name, address, and telephone of local office/agent of Surety Company is:

_____

_____

_____

Approved as to form:

_____

Town Attorney, Town of Yarrow Point Date

MAY BE DELETED AT OWNER'S REQUEST

PART 3

SPECIAL PROVISIONS

INTRODUCTION TO THE SPECIAL PROVISIONS

(August 14, 2013 APWA GSP)

The work on this project shall be accomplished in accordance with the *Standard Specifications for Road, Bridge and Municipal Construction*, 2018 edition, as issued by the Washington State Department of Transportation (WSDOT) and the American Public Works Association (APWA), Washington State Chapter (hereafter "Standard Specifications"). The Standard Specifications, as modified or supplemented by the Amendments to the Standard Specifications and these Special Provisions, all of which are made a part of the Contract Documents, shall govern all of the Work.

These Special Provisions are made up of both General Special Provisions (GSPs) from various sources, which may have project-specific fill-ins; and project-specific Special Provisions. Each Provision either supplements, modifies, or replaces the comparable Standard Specification, or is a new Provision. The deletion, amendment, alteration, or addition to any subsection or portion of the Standard Specifications is meant to pertain only to that particular portion of the section, and in no way should it be interpreted that the balance of the section does not apply.

The project-specific Special Provisions are not labeled as such. The GSPs are labeled under the headers of each GSP, with the effective date of the GSP and its source. For example:

(March 8, 2013 APWA GSP)
(April 1, 2013 WSDOT GSP)
(May 1, 2013 G&O GSP)

Also incorporated into the Contract Documents by reference are:

- *Manual on Uniform Traffic Control Devices for Streets and Highways*, currently adopted edition, with Washington State modifications, if any
- *Standard Plans for Road, Bridge and Municipal Construction*, WSDOT/APWA, current edition

Contractor shall obtain copies of these publications, at Contractor's own expense.

DIVISION 1

GENERAL REQUIREMENTS

DIVISION 1

GENERAL REQUIREMENTS

DESCRIPTION OF WORK

(March 13, 1995)

This Contract provides for the removal and replacement the existing storm drainage pipe on NE 42nd Street with a new 24-inch diameter storm pipe along with undergrounding the existing aerial utilities on both NE 42nd Street and 91st Avenue NE into a joint utility trench. This project also includes installation of the catch basins and utility provided vaults, pedestals and hand holes, clearing and grubbing, pavement restoration, surface restoration, traffic control, erosion control, other work all in accordance with the attached Contract Plans, these Special Provisions and the Standard Specifications.

1-01 DEFINITIONS AND TERMS

1-01.3 Definitions

(January 4, 2016 G&O GSP)

Delete the definition of “Bid Documents,” “Completion Dates,” “Contract” and “Contracting Agency.”

This Section is supplemented with the following:

> All references in the Standard Specifications, Amendments or WDSOT General Provisions to the terms “Department of Transportation,” “Washington State Transportation Commission,” “Commission,” “Secretary of Transportation,” “Secretary,” “Headquarters,” and “State Treasurer” shall be revised to read “Contracting Agency.”
>
> All references to the terms “State” or “state” shall be revised to read “Contracting Agency” unless the reference is to an administrative agency of the State of Washington, a State statute or regulation, or the context reasonably indicates otherwise.
>
> All references to “State Materials Laboratory” shall be revised to read “Contracting Agency designated location.”
>
> All references to “final contract voucher certification” shall be interpreted to mean the Contracting Agency form(s) by which final payment is authorized, and final completion and acceptance granted.

Additive
A supplemental unit of work or group of bid items, identified separately in the Proposal, which may, at the discretion of the Contracting Agency, be awarded in addition to the base bid.

Alternate
One of two or more units of work or groups of bid items, identified separately in the Proposal, from which the Contracting Agency may make a choice between different methods or material of construction for performing the same work.

Bid Documents
The component parts of the proposed Contract which may include, but not limited to, the Proposal form, the proposed Contract Provisions, the proposed Contract Plans, Addenda, and Subsurface Boring Logs (if any).

Business Day
A business day is any day from Monday through Friday, except holidays as listed in Section 1-08.5.

Contract
The written agreement between the Contracting Agency and the Contractor. It describes, among other things:

1. What work will be done, and by when;
2. Who provides labor and materials; and
3. How Contractor will be paid.

The Contract includes the Contract (Agreement) form, bidder's completed Proposal Form, all required certificates and affidavits, performance and payment bonds, the 2018 Standard Specifications for Road, Bridge and Municipal Construction and amendments thereto, Contract Provisions, Contract Plans, Standard Plans, addenda and change orders.

Contract Bond
The definition in the Standard Specifications for "Contract Bond" applies to whatever bond form(s) are required by the Contract Documents, which may be a combination of a Payment Bond and a Performance Bond.

Contract Documents
See definition for "Contract."

Contract Time
The period of time established by the terms and conditions of the contract within which the work must be completed.

Contracting Agency (Owner)
Agency of Government that is responsible for the execution and administration of the Contract.

Dates

Bid Opening Date
The date on which the Contracting Agency publicly opens and reads the bids.

Award Date
The date of the formal decision of the Contracting Agency to accept the lowest responsible and responsive bidder for the Work.

Contract Execution Date
The date when both the Contractor and the Contracting Agency have signed the Agreement, binding themselves to the Contract.

Notice to Proceed Date
The date stated in the Notice to Proceed on which the Contract time begins.

Substantial Completion Date
The day the Engineer determines the Contracting Agency has full and unrestricted use and benefit of the facilities, both from the operational and safety standpoint, any remaining traffic disruptions will be rare and brief, and only minor incidental work, replacement of temporary substitute facilities, plant establishment periods or correction or repair remains for the Physical Completion of the total Contract.

Physical Completion Date
The day all of the Work is physically completed on the project. The Engineer has received from the Contractor record drawings, operation and maintenance manuals, manufacturers' affidavits, and software and programming.

Completion Date
The day all the Work specified in the Contract is completed and all the obligations of the Contractor under the Contract are fulfilled by the Contractor. All documentation required by the Contract and required

by law must be furnished by the Contractor before establishment of this date.

Final Acceptance Date
The date on which the Contracting Agency accepts the Work as complete.

Notice of Award
The written notice from the Contracting Agency to the successful bidder signifying the Contracting Agency's acceptance of the Bid Proposal.

Notice to Proceed
The written notice from the Contracting Agency or Engineer to the Contractor authorizing and directing the Contractor to proceed with the Work and establishing the date on which the Contract time begins.

Traffic
Both vehicular and non-vehicular traffic, such as pedestrians, bicyclists, wheelchairs, and equestrian traffic.

1-02 BID PROCEDURES AND CONDITIONS

1-02.1 Prequalification of Bidders

Delete this Section and replace it with the following:

1-02.1 Qualifications of Bidder
(January 24, 2011 APWA GSP)

Before award of a public works contract, a bidder must meet at least the minimum qualifications of RCW 39.04.350(1) to be considered a responsible bidder and qualified to be awarded a public works project.

1-02.1(1) Supplemental Qualifications Criteria
(April 6, 2018 G&O GSP)

In addition, the Contracting Agency has established Contracting Agency-specific and/or project-specific supplemental criteria, in accordance with RCW 39.04.350(3), for determining Bidder responsibility, including the basis for evaluation and the deadline for appealing a determination that a Bidder is not responsible. These criteria are contained in Section 1-02.14.

1-02.2 Plans and Specifications
(June 27, 2011 G&O GSP)

Delete this Section and replace it with the following:

Information as to where Bid Documents can be obtained or reviewed is contained in the Call for Bids (Advertisement for Bids) for the work.

After Award of the Contract, Plans and Contract Provisions will be issued to the Contractor at as stated below:

To Prime Contractor	No. of Sets	Basis of Distribution
Large Plans (22" x 34")	1	Furnished automatically
Contract Provisions	5	Furnished automatically
Reduced Plans (11" x 17")	1	Furnished automatically

Additional Plans and other Contract Provisions may be purchased by the Contractor.

1-02.4 Examination of Plans, Specifications, and Site of Work

1-02.4(1) General
(June 16, 2006 G&O GSP)

This Section is supplemented with the following:

Contractor shall review the entire Contract to ensure that the completeness of their Proposal includes all items of Work regardless of where shown in the Contract. Bidders are cautioned that alternate sources of information (copies of the Contract obtained from third parties) are not necessarily an accurate or complete representation of the Contract. Bidders shall use such information at their own risk.

1-02.4(2) Subsurface Information
(June 16, 2006 G&O GSP)

Delete this Section and replace it with the following:

If the Contracting Agency has made a subsurface investigation of the site of the proposed Work, the boring log data and soil sample test data accumulated by the Contracting Agency will be made available for

inspection by the Bidders. However, the Contracting Agency makes no representation or warranty, expressed or implied, that:

a. The Bidders' interpretations from the boring logs may be correct;

b. Moisture conditions and indicated water tables will not vary from those found at the time the borings were made;

c. The ground at the location of the borings has not been physically disturbed or altered after the boring was made; and

d. Conditions below the surface of the ground are consistent throughout the site with the information made available hereunder, or that conditions to be encountered on the site are uniform or consistent with geological conditions usually encountered in the area.

The Contracting Agency makes no representations, guarantees, or warranties as to the condition, materials, or proportions of the materials between the specific borings, regardless of any subsurface information the Contracting Agency may make available to the prospective Bidders. Bidders are solely responsible for making the necessary investigations to support and/or verify any conclusions or assumptions used in preparation of their bids.

Any subsurface investigations and analysis were carried out for design purposes only. Contractor may not rely upon or make any claim against Contracting Agency, Engineer, or any of their subconsultants, with respect to:

1. The completeness of such reports for Contractor's purposes, including, but not limited to, any aspects of the means, methods, techniques, sequences, and procedures of construction to be employed by Contractor, and safety precautions and programs incident thereto; or

2. Other conclusions, interpretations, opinions, representations, and information contained in such reports; or

3. Any Contractor interpretation of or conclusion drawn from any "technical data" or any such other data, conclusions, interpretations, opinions or information.

1-02.5 Proposal Forms
(June 27, 2011 G&O GSP)

Delete this Section and replace it with the following:

Proposals shall be submitted on the Proposal Form, which is included with the Contract. All Proposals shall be completed, signed and dated.

The Proposal Form will identify the project and its location and describe the Work. It will also list estimated quantities, units of measurement, the items of work, and the materials to be furnished at the lump sum and/or unit bid prices. The Bidder shall complete spaces on the Proposal Form that call for, but are not limited to, unit prices; extensions; summations; the total bid amount; signatures; date; and, where applicable, retail sales taxes and acknowledgment of addenda; the bidder's name, address, telephone number, and signature; the Bidder's D/M/WBE commitment, if applicable; a State of Washington Contractor's Registration Number; and a Business License Number, if applicable. Bids shall be completed by typing or shall be printed in ink by hand, preferably in black ink. Required certifications are included as part of the Proposal Form.

The Contracting Agency reserves the right to arrange the proposal forms with alternates and additives, if such be to the advantage of the Contracting Agency. The Bidder shall bid on all alternates and additives set forth in the Proposal form unless otherwise specified.

1-02.6 Preparation of Proposal
(April 6, 2018 G&O GSP)

Supplement the second paragraph with the following:

4. If a minimum bid amount has been established for any item, the unit or lump sum price must equal or exceed the minimum amount stated.

5. Any correction to a bid made by interlineation, alteration, or erasure, shall be initialed by the signer of the bid.

Delete the fourth paragraph.

Delete the last paragraph, and replace it with the following:

The Bidder shall certify compliance with Contractor Certification Wage Law. The certification is included in the Proposal form.

The Bidder shall make no stipulation on the Bid Form, nor qualify the bid in any manner.

A bid by a corporation shall be executed in the corporate name, by the president or a vice president (or other corporate officer accompanied by evidence of authority to sign).

A bid by a partnership shall be executed in the partnership name, and signed by a partner. A copy of the partnership agreement shall be submitted with the Bid Form if any UDBE requirements are to be satisfied through such an agreement.

A bid by a joint venture shall be executed in the joint venture name and signed by a member of the joint venture. A copy of the joint venture agreement shall be submitted with the Bid Form if any UDBE requirements are to be satisfied through such an agreement.

All Proposals submitted shall, on their face, remain valid for a period of 60 days following the date of Bid opening. In the event of a conflict in this duration, which may appear elsewhere in the Contract Provisions, the longest duration shall apply.

1-02.7 Bid Deposit
(March 8, 2013 G&O GSP)

Supplemented this Section with the following:

Bid bonds shall contain the following:

1. The name of the project;

2. The name of the Contracting Agency, named as the obligee;

3. The amount of the bid bond stated either as a dollar figure or as a percentage which represents five percent of the maximum bid amount that could be awarded;

4. The signature of the bidder's officer empowered to sign official statements. The signature of the person authorized to submit the Proposal should agree with the signature on the bond, and the title of the person must accompany the said signature;

5. The signature of the surety's officer empowered to sign the bond, and the power of attorney.

The Bidder must use the bond form included in the Contract.

1-02.9 Delivery of Proposal
(January 3, 2012 G&O GSP)

Delete this section in its entirety and replace with the following:

The Proposal, bid bond, and all other certificates, forms or other documents required by any Contract Provisions to be executed and delivered with said Proposal shall be submitted, in a sealed package, addressed to the Contracting Agency, and plainly marked "Proposal for _____ (insert name of project as shown on the Proposal) to be opened on the _____ day of _____, 20___," (said day, month and year to be used as shown in the published Call for Bids).

The Contracting Agency will not consider any Proposal or any supplement to a Proposal that is received after the time specified for receipt of Proposals, or received in a location other than that specified for receipt of Proposal. Emailed or faxed Proposals or supplement to a Proposal are not acceptable.

1-02.10 Withdrawing, Revising, or Supplementary Proposal
(July 23, 2015 APWA GSP)

Delete this Section and replace it with the following:

After submitting a physical Bid Proposal to the Contracting Agency, the Bidder may withdraw, revise, or supplement it if:

1. The Bidder submits a written request signed by an authorized person and physically delivers it to the place designated for receipt of Bid Proposals, and

2. The Contracting Agency receives the request before the time set for receipt of Bid Proposals, and

3. The revised or supplemented Bid Proposal (if any) is received by the Contracting Agency before the time set for receipt of Bid Proposals.

If the Bidder's request to withdraw, revise, or supplement its Bid Proposal is received before the time set for receipt of Bid Proposals, the Contracting Agency will return the unopened Proposal package to the Bidder. The Bidder must then submit the revised or supplemented package in its

entirety. If the Bidder does not submit a revised or supplemented package, then its bid shall be considered withdrawn.

Late revised or supplemented Bid Proposals or late withdrawal requests will be date recorded by the Contracting Agency and returned unopened. Mailed, emailed, or faxed requests to withdraw, revise, or supplement a Bid Proposal are not acceptable.

1-02.11 Combination and Multiple Proposals
(June 16, 2006 G&O GSP)

Delete this Section in its entirety.

1-02.13 Irregular Proposals
(March 29, 2018 G&O GSP)

Delete this Section and replace it with the following:

1. A proposal will be considered irregular and will be rejected if:

   a. The Bidder is not prequalified when so required;

   b. The authorized proposal form furnished by the Contracting Agency is not used or is altered;

   c. The completed proposal form contains any unauthorized additions, deletions, alternate Bids, or conditions;

   d. The Bidder adds provisions reserving the right to reject or accept the award, or enter into the Contract;

   e. A price per unit cannot be determined from the Bid Proposal;

   f. The Proposal form is not properly executed;

   g. The Bidder fails to submit or properly complete a Subcontractor list, if applicable, as required in Section 1-02.6;

   h. The Bidder fails to submit or properly complete a Disadvantaged Business Enterprise Certification, if applicable, as required in Section 1-02.6;

i. The Bid Proposal does not constitute a definite and unqualified offer to meet the material terms of the Bid invitation; or

j. More than one proposal is submitted for the same project from a Bidder under the same or different names.

2. A Proposal may be considered irregular and may be rejected if:

a. The Proposal does not include a unit price for every Bid item;

b. Any of the unit prices are excessively unbalanced (either above or below the amount of a reasonable Bid) to the potential detriment of the Contracting Agency;

c. Receipt of Addenda is not acknowledged;

d. A member of a joint venture or partnership and the joint venture or partnership submit Proposals for the same project (in such an instance, both Bids may be rejected); or

e. If Proposal form entries are not made in ink.

1-02.14 Disqualification of Bidders
(April 6, 2018 G&O GSP)

Delete this section and replace it with the following:

A Bidder will be deemed not responsible if the Bidder does not meet the mandatory bidder responsibility criteria in RCW 39.04.350(1), as amended; or does not meet Supplemental Criteria 1 through 8 in this Section:

The Contracting Agency will verify that the Bidder meets the mandatory bidder responsibility criteria in RCW 39.04.350(1), and Supplemental Criteria 1. Evidence that the Bidder meets Supplemental Criteria 2 through 8 shall be provided by the Bidder as stated later in this Section.

1. **Federal Debarment**

A. Criterion: The Bidder shall not currently be debarred or suspended by the Federal government.

B. Documentation: The Bidder shall not be listed as having an "active exclusion" on the U.S. government's "System for Award Management" database (www.sam.gov).

2. **Delinquent State Taxes**

A. Criterion: The Bidder shall not owe delinquent taxes to the Washington State Department of Revenue without a payment plan approved by the Department of Revenue.

B. Documentation: The Bidder shall, if and when required as detailed below, sign a statement (on a form to be provided by the Contracting Agency) that the Bidder does not owe delinquent taxes to the Department of Revenue. If the Bidder owes delinquent taxes, they must submit a written payment plan approved by the Department of Revenue, to the Contracting Agency by the deadline listed below.

3. **Claims Against Retainage and Bonds**

A. Criterion: The Bidder shall not have a record of excessive claims filed against the retainage or payment bonds for public works projects in the 3 years prior to the bid submittal date, that demonstrate a lack of effective management by the Bidder of making timely and appropriate payments to its subcontractors, suppliers, and workers, unless there are extenuating circumstances and such circumstances are deemed acceptable to the Contracting Agency.

B. Documentation: The Bidder shall, if and when required as detailed below, sign a statement (on a form to be provided by the Contracting Agency) that the Bidder has not had claims against retainage and bonds in the 3 years prior to the bid submittal date. If the Bidder has had claims against retainage and bonds in the 3 years prior to the bid submittal date, they shall submit a list of the public works projects completed in the 3 years prior to the bid submittal date that have had claims against retainage and bonds and include for each project the following information:

- Name of project
- The owner and contact information for the owner;
- A list of claims filed against the retainage and/or payment bond for any of the projects listed;

- A written explanation of the circumstances surrounding each claim and the ultimate resolution of the claim.

4. **Public Bidding Crime**

A. Criterion: The Bidder and/or its owners shall not have been convicted of a crime involving bidding on a public works contract in the 5 years prior to the bid submittal date.

B. Documentation: The Bidder, if and when required as detailed below, shall sign a statement (on a form to be provided by the Contracting Agency) that the Bidder and/or its owners have not been convicted of a crime involving bidding on a public works contract.

5. **Termination for Cause / Termination for Default**

A. Criterion: The Bidder shall not have had any public works contract terminated for cause or terminated for default by a government agency in the 5 years prior to the bid submittal date, unless there are extenuating circumstances and such circumstances are deemed acceptable to the Contracting Agency.

B. Documentation: The Bidder, if and when required as detailed below, shall sign a statement (on a form to be provided by the Contracting Agency) that the Bidder has not had any public works contract terminated for cause or terminated for default by a government agency in the 5 years prior to the bid submittal date; or if Bidder was terminated, describe the circumstances.

6. **Lawsuits**

A. Criterion: The Bidder shall not have lawsuits with judgments entered against the Bidder in the 5 years prior to the bid submittal date that demonstrate a pattern of failing to meet the terms of contracts, unless there are extenuating circumstances and such circumstances are deemed acceptable to the Contracting Agency.

B. Documentation: The Bidder, if and when required as detailed below, shall sign a statement (on a form to be provided by the

Contracting Agency) that the Bidder has not had any lawsuits with judgments entered against the Bidder in the 5 years prior to the bid submittal date that demonstrate a pattern of failing to meet the terms of contracts, or shall submit a list of all lawsuits with judgments entered against the Bidder in the five years prior to the bid submittal date, along with a written explanation of the circumstances surrounding each such lawsuit. The Contracting Agency shall evaluate these explanations to determine whether the lawsuits demonstrate a pattern of failing to meet of terms of construction related contracts.

7. **Contract Time (Liquidated Damages)**

A. Criterion: The Bidder shall not have had liquidated damages assessed on any projects it has completed 5 years prior to the bid submittal date that demonstrate a pattern of failing to meet contract time, unless there are extenuating circumstances and such circumstances are deemed acceptable to the Contracting Agency.

B. Documentation: The Bidder, if and when required as detailed below, shall sign a statement (on a form to be provided by the Contracting Agency) that the Bidder has not had liquidated damages assessed on any projects it has completed within the five years prior to the bid submittal date, or shall submit a list of Projects with assessed liquidated damages along with Owner contact information, and number of days assessed liquidated damages.

8. **Experience and Capacity**

A. Criterion: The Bidder shall have sufficient current capacity and the project superintendent assigned to the project shall have experience to meet the requirements of this Project. The Bidder and the project superintendent shall have successfully completed at least two projects, of a similar size and scope, during the 5-year period immediately preceding the bid submittal deadline for this project. Similar size is defined as a minimum of 70 percent of the bid amount submitted by the Bidder.

B. Documentation: The Bidder shall, if and when required as detailed below, on a form to be provided by the Contracting

Agency, provide the Bidder's gross dollar amount of work currently under contract, the Bidder's gross dollar amount of contracts currently not completed, five major pieces of equipment anticipated to be on the project and whether the equipment is leased or owned, name of superintendent assigned to this project and their number of years of experience, and two project references of similar size and scope during the five year period immediately preceding the bid submittal deadline for this project. The Contracting Agency may check owner references for the previous projects and may evaluate the owner's assessment of the Bidder performance.

As evidence that the Bidder meets Supplemental Responsibility Criteria 2 through 8 stated above, the apparent two lowest Bidders must submit to the Contracting Agency by 12:00 P.M. (noon) of the second business day following the bid submittal deadline, a written statement verifying that the Bidder meets Supplemental Criteria 2 through 8 together with supporting documentation (sufficient in the sole judgment of the Contracting Agency) demonstrating compliance with Supplemental Responsibility Criteria 2 through 8. The Contracting Agency reserves the right to request further documentation as needed from the low bidder and documentation from other Bidders as well to assess Bidder responsibility and compliance with all bidder responsibility criteria. The Contracting Agency also reserves the right to obtain information from third-parties and independent sources of information concerning a Bidder's compliance with the mandatory and supplemental criteria, and to use that information in their evaluation. The Contracting Agency may consider mitigating factors in determining whether the Bidder complies with the requirements of the Supplemental Criteria.

The basis for evaluation of Bidder compliance with these mandatory and Supplemental Criteria shall include any documents or facts obtained by Contracting Agency (whether from the Bidder or third parties) including but not limited to: (i) financial, historical, or operational data from the Bidder; (ii) information obtained directly by the Contracting Agency from others for whom the Bidder has worked, or other public agencies or private enterprises; and (iii) any additional information obtained by the Contracting Agency which is believed to be relevant to the matter.

If the Contracting Agency determines the Bidder does not meet the bidder responsibility criteria above and is therefore not a responsible Bidder, the Contracting Agency shall notify the Bidder in writing, with the reasons for its determination. If the Bidder disagrees with this determination, it may appeal the determination within 2 business days of the Contracting Agency's

determination by presenting its appeal and any additional information to the Contracting Agency. The Contracting Agency will consider the appeal and any additional information before issuing its final determination. If the final determination affirms that the Bidder is not responsible, the Contracting Agency will not execute a contract with any other Bidder until at least 2 business days after the Bidder determined to be not responsible has received the Contracting Agency's final determination.

Request to Change Supplemental Bidder Responsibility Criteria Prior To Bid: Bidders with concerns about the relevancy or restrictiveness of the Supplemental Bidder Responsibility Criteria may make or submit requests to the Contracting Agency to modify the criteria. Such requests shall be in writing, describe the nature of the concerns, and propose specific modifications to the criteria. Bidders shall submit such requests to the Contracting Agency no later than 5 business days prior to the bid submittal deadline and address the request to the Project Engineer or such other person designated by the Contracting Agency in the Bid Documents.

1-02.15 Pre-Award Information
(August 14, 2013 APWA GSP)

Delete this Section and replace it with the following:

Before awarding any Contract, the Contracting Agency may require one or more of these items or actions of the apparent lowest responsible bidder:

1. A complete statement of the origin, composition, and manufacture of any or all materials to be used,

2. Samples of these materials for quality and fitness tests,

3. A progress schedule (in a form the Contracting Agency requires) showing the order of and time required for the various phases of the work,

4. A breakdown of costs assigned to any bid item,

5. Attendance at a conference with the Engineer or representatives of the Engineer,

6. Obtain, and furnish a copy of, a business license to do business in the city or county where the work is located,

7. Any other information or action taken that is deemed necessary to ensure that the Bidder is the lowest responsible bidder.

1-03 AWARD AND EXECUTION OF CONTRACT

1-03.1 Consideration of Bids
(January 23, 2006 APWA GSP)

Revise the first paragraph to read:

After opening and reading proposals, the Contracting Agency will check them for correctness of extensions of the prices per unit and the total price. If a discrepancy exists between the price per unit and the extended amount of any bid item, the price per unit will control. If a minimum bid amount has been established for any item and the bidder's unit or lump sum price is less than the minimum specified amount, the Contracting Agency will unilaterally revise the unit or lump sum price, to the minimum specified amount and recalculate the extension. The total of extensions, corrected where necessary, including sales taxes where applicable and such additives and/or alternates as selected by the Contracting Agency, will be used by the Contracting Agency for award purposes and to fix the Awarded Contract Price amount and the amount of the contract bond.

1-03.2 Award of Contract
(June 16, 2006 G&O GSP)

Delete this Section and replace it with the following:

Normally, Contract Award or bid rejection will occur within 60 calendar days after bid opening. If the lowest responsible Bidder and the Contracting Agency agree, this deadline may be extended. If they cannot agree on an extension by the 60th calendar day deadline, the Contracting Agency reserves the right to award the Contract to the next lowest responsible Bidder or reject all bids. The Contracting Agency will notify the successful Bidder of the Contract Award in writing.

1-03.3 Execution of Contract
(June 16, 2006 G&O GSP)

Delete this Section and replace it with the following:

Within 10 calendar days after the Award date, the successful Bidder shall return the signed Contracting Agency-prepared Contract, an insurance

certification as required by Section 1-07.18, and satisfactory bonds as required by law and Section 1-03.4. Before execution of the Contract by the Contracting Agency, the successful Bidder shall provide any pre-Award information the Contracting Agency may require under Section 1-02.15.

Until the Contracting Agency executes a Contract, no Proposal shall bind the Contracting Agency nor shall any work begin within the project limits or within Contracting Agency-furnished sites. The Contractor shall bear all risks for any work begun outside such areas and for any materials ordered before the Contract is executed by the Contracting Agency.

A written Notice to Proceed will be issued after the Contract has been executed by the Contractor and the Contracting Agency, and the performance and labor and material payment bonds, other required certificates and documents and insurance certificates are approved by the Contracting Agency or, where applicable, by State or Federal agencies responsible for funding any portion of the project.

1-03.4 Contract Bond

(July 23, 2015, G&O GSP)

Revise the first paragraph to read:

The successful bidder shall provide an executed performance and public works payment bonds for the full contract amount. These bonds shall:

1. Be on Contracting Agency-furnished forms;

2. Be signed by an approved surety (or sureties) that:

   a. Is registered with the Washington State Insurance Commissioner; and

   b. Appears on the current Authorized Insurance List in the State of Washington published by the Office of the Insurance Commissioner.

3. Be conditioned upon the faithful performance of the contract by the Contractor within the prescribed time;

4. Guarantee that the Contractor will perform and comply will all obligations, duties, and conditions under the Contract including, but not limited to, the duty and obligation to indemnify, defend, and

protect the Contracting Agency against all losses and claims related directly or indirectly from any failure:

a. Of the Contractor (or any of the employees, subcontractors, or lower tier subcontractors of the Contractor) to faithfully perform and comply with the contract; or

b. Of the Contractor (or the subcontractors or lower tier subcontractors of the Contractor) to pay all laborers, mechanics, subcontractors, lower tier subcontractors, materialperson, or any other person who provides supplies or provisions for carrying out the work.

5. Be conditioned upon payment of taxes, increases, and penalties incurred on the project under Titles 50, 51, and 82 RCW; and

6. Be accompanied by a power of attorney for the Surety's officer empowered to sign the bond; and

7. Be signed by an officer of the Contractor empowered to sign official statements (sole proprietor or partner). If the Contractor is a corporation, the bond must be signed by the president or vice-president, unless accompanied by written proof of the authority of the individual signing the bond to bind the corporation (i.e., corporate resolution, power of attorney or a letter to such effect by the president or vice-president).

1-03.7 Judicial Review
(November 30, 2018 APWA GSP)

Revise this Section to read:

Any decision made by the Contracting Agency regarding the Award and execution of the Contract or Bid rejection shall be conclusive subject to the scope of judicial review permitted under Washington Law. Such review, if any, shall be timely filed in the Superior Court of <u>the county where the Contracting Agency headquarters is located, provided that where an action is asserted against a county, RCW 36.01.050 shall control venue and jurisdiction</u>.

1-04 SCOPE OF THE WORK

1-04.2 Coordination of Contract Documents, Plans, Special Provisions, Specifications, and Addenda

(January 3, 2012 G&O GSP)

Delete the first two paragraphs of this Section and replace them with the following:

> The complete Contract includes these parts: Contract (Agreement) form, bidder's completed Proposal Form, the Standard Specifications for Road, Bridge, and Municipal Construction and amendments thereto, Contract Provisions, Plans, Standard Plans, addenda, all required certificates and affidavits, performance and labor and material payment bonds, and change orders. These parts complement each other in describing a complete Work. Any requirement in one part binds as if stated in all parts. The Contractor shall provide any work or materials clearly implied in the Contract even if the Contract does not mention it specifically.
>
> Any inconsistency in the parts of the Contract shall be resolved by following this order of precedence (e.g., 1 presiding over 2, 2 over 3, 3 over 4, and so forth):
>
> 1. Addenda,
> 2. Proposal Form and Agreement,
> 3. Special Provisions,
> 4. Contract Plans,
> 5. Amendments to the Standard Specifications,
> 6. WSDOT/APWA Standard Specifications for Road, Bridge and Municipal Construction,
> 7. Contracting Agency's Standard Plans (if any), and
> 8. WSDOT/APWA Standard Plans for Road, Bridge, and Municipal Construction

1-04.4 Changes

1-04.4(1) Minor Changes

(June 7, 2019 G&O GSP)

This Section is revised to read as follows:

> Payments or credits for changes may be made under the Bid item "Minor Change." At the discretion of the Contracting Agency, this procedure for Minor Changes may be used in lieu of the more formal procedure as outlined in Section 1-04.4, Changes.

The Contractor will be provided a copy of the completed order for Minor Changes. The agreement for the Minor Changes will be documented by signature of the Contractor, or notation of verbal agreement. If the Contractor is in disagreement with anything required by the order for Minor Changes, the Contractor may protest the order as provided in Section 1-04.5.

Payments will be determined in accordance with Section 1-09.4. For the purpose of providing a common Proposal for all Bidders, the Contracting Agency has entered an amount for "Minor Change" in the Proposal to become a part of the total Bid by the Contractor. The Contractor/Bidder is cautioned that payment of any portion of this bid item is not guaranteed unless such need arises during the performance of this project. Where references are made herein to consider some work incidental to the Contract and as such to merge the cost of incidental work into the various items bid, no such costs shall be merged into this bid item.

All "Minor Change" work will be within the scope of the Contract Work and will not change Contract Time.

1-04.6 Variation in Estimated Quantities
(July 23, 2015 APWA GSP)

Delete the first paragraph of this Section and replace it with the following:

Payment to the Contractor will be made only for the actual quantities of Work performed and accepted in conformance with the Contract. When the accepted quantity of Work performed under a unit item varies from the original Proposal quantity, payment will be at the unit Contract price for all Work unless the total accepted quantity of any Contract item, adjusted to exclude added or deleted amounts included in change orders accepted by both parties, increases or decreases by more than 25 percent from the original Proposal quantity, and if the total extended bid price for that item at the time of award is equal to or greater than 10 percent of the total Contract price at time of Award. In that case, payment for Contract Work may be adjusted as described herein.

1-05 CONTROL OF WORK

1-05.1 Authority of the Engineer

(June 16, 2006 G&O GSP)

This Section is supplemented with the following:

The Engineer does not purport to be a safety expert, is not engaged in that capacity under this Contract or the Engineer's contract with the Contracting Agency. The Engineer does not have either the authority or the responsibility to enforce construction safety laws, rules, regulations or procedures, or to order the stoppage of Work for claimed violations thereof. From time to time, the Engineer may inform the Contractor of conditions that may constitute safety issues or violations. Such information will be provided solely to cooperate with and assist the Contractor and shall not make the Engineer or Inspector responsible for the enforcement of safety laws, rules, regulations or procedures. After receiving information relating to safety issues from the Engineer, the Contractor shall make its own examination and analysis of the situation reported and take such action, if any, that the Contractor determines to be appropriate. The Engineer's performance of project representation and observation services for the Contracting Agency shall not make the Engineer responsible for the enforcement of safety laws, rules, regulations or procedures. The Engineer also shall not be responsible for construction means, methods, techniques, sequences, or procedures or for the Contractor's failure to properly perform the Work, all of which are entirely the responsibility of the Contractor.

The Engineer shall have no liability whatsoever to, or contractual relationship with, the Contractor in any way relating to this Contract. The Contracting Agency and the Contractor must look solely to each other for the enforcement with respect to any rights, obligations, claims or liabilities arising under or in any way relating to the Contract. Neither the authority given to the Engineer herein, nor any action or service provided by the Engineer or its subconsultants with regard to the Project, shall create any duty owed by the Engineer or its subconsultants to the Contractor or a cause of action against the Engineer or its subconsultants by Contractor.

Neither the Engineer nor any of its assistants or agents shall have any power to waive any obligation of the Contract. The Engineer's failure to reject Work that is defective or otherwise does not comply with the requirements of the Contract shall not constitute approval or acceptance of the Work or relieve the Contractor of its obligations under the Contract, notwithstanding that such Work have been estimated for payment or that payments have been made for that Work. Neither shall such failure to reject

Work, nor any acceptance by the Engineer or by the Contracting Agency of any part of or the whole of the Work bar a claim by the Contracting Agency at any subsequent time for recovery of damages for the cost of removal and replacement of any portions of the Work that do not comply with the Contract.

1-05.2 Authority of Assistants and Inspectors
(June 16, 2006 G&O GSP)

This Section is supplemented with the following:

The presence or absence of an Inspector at the Work site will be at the sole discretion of the Contracting Agency and will not in any way relieve the Contractor of its responsibility to properly perform the Work as required by the Contract Provisions.

The Inspector does not purport to be a safety expert, and is not engaged in that capacity under this Contract or the Engineer's contract with the Contracting Agency. The Inspector does not have the authority or the responsibility to enforce construction safety laws, rules, regulations or procedures, or to order the stoppage of Work for claimed violations thereof. From time to time, the Inspector may inform the Contractor of conditions that may constitute safety issues or violations. Such information will be provided solely to cooperate with and assist the Contractor and shall not make the Inspector or the Engineer responsible for the enforcement of safety laws, rules, regulations or procedures. After receiving information relating to safety issues from the Resident Engineer, the Contractor shall make its own examination and analysis of the situation reported and take such action, if any, that the Contractor determines to be appropriate. The Inspector's performance of project representation and observation services shall not make the Inspector responsible for the enforcement of safety laws, rules, regulations or procedures; nor shall it make the Inspector responsible for construction means, methods, techniques, sequences, or procedures, or for the Contractor's failure to properly perform the Work, all of which are entirely the responsibility of the Contractor.

1-05.4 Conformity With and Deviation from Plans and Stakes

(February 15, 2008 G&O GSP)

Delete this Section and replace it with the following:

1-05.4(1) Description

The Contracting Agency will provide construction survey for this project as specifically listed herein. The Contractor shall furnish all additional survey he deems necessary beyond that stated below. All costs of Contractor provided survey to include any additional calculations, surveying, and measuring required for utilizing and maintaining the necessary lines and grades provided by the Contracting Agency shall be the Contractor's responsibility and shall be considered incidental to the project, and as such, merged in the various prices bid. The Contractor shall be responsible for maintaining and the cost of resetting all Contracting Agency-provided stakes, hubs, lath, nails, etc. All construction staking provided by the Contracting Agency is on a "One-Time Basis" only. Any restaking required due to stakes being removed, lost, damaged, or displaced by the Contractor, Contractor's subcontractor, Contractor's material suppliers, or others working directly or indirectly for the Contractor shall be replaced at the Contractor's expense. As such, the Contracting Agency's surveyors will be employed for this restaking. The Contractor shall be charged by the Contracting Agency at $200.00 per hour including travel time and the cost of this work shall be deleted from money due the Contractor.

The meaning of words and terms used in this provision shall be as listed in "Definitions of Surveying and Associated Terms" current edition, published by the American Congress on Surveying and Mapping, and the American Society of Civil Engineers.

Contracting Agency provided survey shall include one set of the following:

1. Contracting Agency will establish the centerlines of all alignments, by placing hubs, stakes, nails, or marks on centerline or on offsets to centerline, including the beginning and end points of horizontal and vertical curves. Centerline alignment points will be set at intervals of approximately 100 feet.

2. Contracting Agency will establish clearing limits, placing stakes at all major angle points and at intermediate points at approximately 100-foot intervals.

3. Contracting Agency will establish the horizontal and vertical location of all major storm structures, placing offset stakes to all storm structures. An offset line will be staked for the horizontal storm pipe alignment as follows: one stake at 25 foot and one stake at 100-foot stations, as measured upstream from structures.

4. Contracting Agency will establish intermediate elevation benchmarks, and/or control points, as needed to check work throughout the project.

5. Contracting Agency will provide one-time staking and layout, to adequately locate, construct, and check the specific construction activity as follows:

   - Junction boxes, vaults, handholes, and transformers will be staked with a single offset point.
   - Channelization striping will NOT be staked by the Contracting Agency. Rather it shall be staked/located by the Contractor and reviewed in the field by the Engineer prior to its installation.

The Contractor shall provide the Contracting Agency copies of any calculations and staking data performed by the Contractor when requested by the Engineer.

Stakes shall be marked in accordance with the Plans. When stakes are needed that are not described in the Plans, those stakes shall be marked as directed by the Engineer.

The Contracting Agency is responsible for locating and referencing those monuments shown on the Plans, of being removed or destroyed during construction, and preparing the state forms for those monuments only. The Contractor shall protect all survey markers and monuments unless shown otherwise on the Plans. It is anticipated that some survey markers, monuments, and property corners will be disturbed or destroyed by construction operations. In the event the Contractor disturbs or destroys any survey marker during the course of construction, not indicated to be removed/replaced on the Plans, the Contractor shall bear all costs of survey, resetting, legal claims, filing state forms, and any and all costs associated with this item.

All survey markers, property corners, or monuments, not shown on the plans to be replaced, shall be protected and preserved as specified herein.

The Contractor shall employ a land surveyor registered in the State of Washington and acceptable to the Contracting Agency and submit name, address, and telephone number of surveyor before starting construction.

The Contractor shall maintain a complete and accurate reference record of all survey markers, monuments, property corners, etc., on this project. No such marker, monument, pin, or point shall be removed or disturbed prior to "reference" points being established by said land surveyor. Any and all State forms required for temporary removal of such a marker, monument, or property corner/stake shall be procured and processed by the contractor's licensed land surveyor. A copy of this form(s) shall be given to the Contracting Agency.

The Contractor shall provide traffic control sufficient to permit the Engineer to set those points and elevations that are the responsibility of the Contracting Agency and to perform random checks of the surveying performed by the Contractor.

The Contractor shall keep the Engineer informed of staking requirements to provide the Engineer with adequate time to set the stakes for which the Contracting Agency is responsible. Contractor requests for stakes shall be made, in writing on the form provided by the Engineer, at least 3 full working days before the Engineer is required to begin the staking operation.

1-05.4(2) Payment

All costs to prepare and implement any additional survey work as required by the Contractor to complete the Work, including maintaining, resetting, referencing, resurveying, checking, replacement of missing or damaged stakes, and coordination efforts shall be included in the bid prices for the various items associated with the survey work.

1-05.7 Removal of Defective and Unauthorized Work

(June 16, 2006 G&O GSP)

This Section is supplemented with the following:

If the Contractor fails to remedy defective or unauthorized work within the time specified in a written notice from the Contracting Agency, or fails to perform any part of the Work required by the Contract, the Engineer may correct and remedy such work as may be identified in the written notice with Contracting Agency forces or by such other means as the Contracting Agency may deem necessary.

If the Contractor fails to comply with a written order to remedy what the Engineer determines to be an emergency or urgent situation, the Contracting Agency may have the defective work corrected immediately, have the rejected work removed and replaced, or have work that the Contractor refuses or fails to perform completed by others. An emergency or urgent situation is any situation when, in the opinion of the Engineer, a delay in taking remedial action could be potentially unsafe and may cause risk of personal injury, property damage, or economic loss to the public, the Work, or the Contracting Agency.

Direct or indirect costs incurred by the Contracting Agency attributable to correcting and remedying defective or unauthorized work, or work the Contractor failed or refused to perform, shall be paid by the Contractor. Payment will be deducted by the Contracting Agency from monies due, or to become due, the Contractor. Such direct and indirect costs shall include, without limitation, compensation for additional professional services required, and costs for repair and replacement of work of others destroyed or damaged by correction, removal, or replacement of the Contractor's defective or unauthorized work.

No extension of the Contract time or additional compensation will be allowed because of any delay in the performance of the Work attributable to the Contracting Agency's exercise of its rights provided by this Section.

The rights provided to the Contracting Agency by this Section shall not diminish the Contracting Agency's right to pursue any other or additional remedy with respect to the Contractor's failure to perform the Work as required.

1-05.11 Final Inspection
(June 16, 2006 G&O GSP)

Delete this Section and replace it with the following:

1-05.11 Final Inspections and Operational Testing (New Section)
(June 16, 2006 G&O GSP)

1-05.11(1) Substantial Completion Date

When the Contractor considers the Work to be substantially complete, the Contractor shall notify the Engineer in writing and request that the Engineer establish the Substantial Completion Date. The Contractor's notice shall list the specific items of the Work that remain to be completed in order to achieve physical completion. The Engineer will schedule an inspection of

the Work with the Contractor to determine the status of completion. The Engineer may also establish the Substantial Completion Date unilaterally.

If, after inspection, the Engineer concurs with the Contractor that the Work is substantially complete and ready for its intended use, the Engineer, by written notice to the Contractor, will establish the Substantial Completion Date. If, after inspection, the Engineer does not consider the Work to be substantially complete and ready for its intended use, the Engineer will notify the Contractor in writing and provide the reasons therefore.

Upon receipt of written notice either establishing the Substantial Completion Date or informing the Contractor that the Work is not substantially complete, whichever is applicable, the Contractor shall pursue vigorously, diligently and without unauthorized interruption, the work necessary to reach substantial completion and physical completion of the Work. The Contractor shall provide the Engineer with a revised schedule indicating when the Contractor expects to reach substantial and physical completion of the Work.

The above process shall be repeated until the Engineer establishes the Substantial Completion Date and the Contractor considers the Work physically complete and ready for final inspection.

1-05.11(2) Final Inspection and Physical Completion Date

When the Contractor considers the Work to be physically complete and ready for final inspection, the Contractor shall provide written notice to the Engineer requesting a final inspection. The Engineer will then schedule a date for final inspection. The Engineer and the Contractor will then make a final inspection, and the Engineer will notify the Contractor in writing of all particulars in which the final inspection reveals the Work to be incomplete or unacceptable. The Contractor shall immediately take such corrective measures as are necessary to remedy the listed deficiencies. Corrective work shall be pursued vigorously, diligently, and without interruption until the listed deficiencies have been completed. This process will continue until the Contracting Agency is satisfied the listed deficiencies have been corrected and the Work is physically complete.

If action to correct the listed deficiencies is not initiated within seven days after receipt of the written notice listing the deficiencies, the Contracting Agency may, upon written notice to the Contractor, take whatever steps are necessary to correct those deficiencies pursuant to Section 1-05.7. The Contractor will not be allowed any extension of the Contract time or

additional compensation because of a delay in the performance of the Work attributable to the exercise of the Contracting Agency's rights hereunder.

Upon correction of all deficiencies, the Engineer will notify the Contractor and the Contracting Agency, in writing, of the date upon which the Work was considered physically complete. That date shall constitute the Physical Completion Date of the Contract, but shall not constitute acceptance of the Work or imply that all the obligations of the Contractor under the Contract have been fulfilled.

Add the following new section:

1-05.12(1) 2-Year Guarantee Period
(March 8, 2013 G&O GSP)

The Contractor shall return to the project and repair or replace all defects in workmanship and material discovered within two years after Final Acceptance of the Work. The Contractor shall start work to remedy any such defects within 7 calendar days of receiving Contracting Agency's written notice of a defect, and shall complete such work within the time stated in the Contracting Agency's notice. In case of an emergency, where damage may result from delay or where loss of services may result, such corrections may be made by the Contracting Agency's own forces or another contractor, in which case the cost of corrections shall be paid by the Contractor. In the event the Contractor does not accomplish corrections within the time specified, the work will be otherwise accomplished and the cost of same shall be paid by the Contractor.

When corrections of defects are made, the Contractor shall then be responsible for correcting all defects in workmanship and materials in the corrected work for two years after acceptance of the corrections by Contracting Agency.

This guarantee is supplemental to and does not limit or affect the requirements that the Contractor's work comply with the requirements of the Contract or any other legal rights or remedies of the Contracting Agency.

1-05.13 Superintendents, Labor and Equipment of Contractor
(August 14, 2013 APWA GSP)

Delete the sixth and seventh paragraph of this Section.

1-05.15 Method of Serving Notices
(March 25, 2009 APWA GSP)

Revise the second paragraph to read:

> All correspondence from the Contractor shall be directed to the Project Engineer. All correspondence from the Contractor constituting any notification, notice of protest, notice of dispute, or other correspondence constituting notification required to be furnished under the Contract, must be in paper format, hand delivered or sent via mail delivery service to the Project Engineer's office. Electronic formats such as e-mails or electronically delivered copies of correspondence will not constitute such notice and will not comply with the requirements of the Contract.

Add the following new section:

> **1-05.18 Record Drawings**
> (March 8, 2013 APWA GSP)
>
> The Contractor shall maintain one set of full size plans for Record Drawings, updated with clear and accurate red-lined field revisions on a daily basis, and within 2 business days after receipt of information that a change in Work has occurred. The Contractor shall not conceal any work until the required information is recorded.
>
> This Record Drawing set shall be used for this purpose alone, shall be kept separate from other Plan sheets, and shall be clearly marked as Record Drawings. These Record Drawings shall be kept on site at the Contractor's field office, and shall be available for review by the Contracting Agency at all times. The Contractor shall bring the Record Drawings to each progress meeting for review.
>
> The preparation and upkeep of the Record Drawings is to be the assigned responsibility of a single, experienced, and qualified individual. The quality of the Record Drawings, in terms of accuracy, clarity, and completeness, is to be adequate to allow the Contracting Agency to modify the computer-aided drafting (CAD) Contract Drawings to produce a complete set of Record Drawings for the Contracting Agency without further investigative effort by the Contracting Agency.

The Record Drawing markups shall document all changes in the Work, both concealed and visible. Items that must be shown on the markups include but are not limited to:

- Actual dimensions, arrangement, and materials used when different than shown in the Plans.
- Changes made by Change Order or Field Order.
- Changes made by the Contractor.
- Accurate locations of storm sewer, sanitary sewer, water mains and other water appurtenances, structures, conduits, light standards, vaults, width of roadways, sidewalks, landscaping areas, building footprints, channelization and pavement markings, etc. Include pipe invert elevations, top of castings (manholes, inlets, etc.).

If the Contract calls for the Contracting Agency to do all surveying and staking, the Contracting Agency will provide the elevations at the tolerances the Contracting Agency requires for the Record Drawings.

When the Contract calls for the Contractor to do the surveying/staking, the applicable tolerance limits include, but are not limited to the following:

	Vertical	Horizontal
As-built storm invert and grate elevations	± 0.01 foot	± 0.01 foot
As-built monumentation	± 0.001 foot	± 0.001 foot
As-built gas lines, power, TV, Tel, Com	± 0.10 foot	± 0.10 foot

Making Entries on the Record Drawings:

- Use erasable colored pencil (not ink) for all markings on the Record Drawings, conforming to the following color code:
  - Additions - Red
  - Deletions - Green
  - Comments - Blue
  - Dimensions - Graphite

- Provide the applicable reference for all entries, such as the change order number, the request for information (RFI) number, or the approved shop drawing number.

- Date all entries.

- Clearly identify all items in the entry with notes similar to those in the Contract Drawings (such as pipe symbols, centerline elevations, materials, pipe joint abbreviations, etc.).

The Contractor shall certify on the Record Drawings that said drawings are an accurate depiction of built conditions, and in conformance with the requirements detailed above. The Contractor shall submit final Record Drawings to the Contracting Agency. Contracting Agency acceptance of the Record Drawings is one of the requirements for achieving Physical Completion.

Payment will be made for the following bid item:

Record Drawings (Minimum Bid $1,000)	Lump Sum

Payment for this item will be made on a prorated monthly basis for work completed in accordance with this section up to 75% of the lump sum bid. The final 25% of the lump sum item will be paid upon submittal and approval of the completed Record Drawings set prepared in conformance with these Special Provisions.

A minimum bid amount has been entered in the Bid Proposal for this item. The Contractor must bid at least that amount.

1-06 CONTROL OF MATERIAL

1-06.1 Approval of Materials Prior to Use

(January 3, 2012 G&O GSP)

This Section is supplemented with the following:

The Contractor shall be responsible for the accuracy and completeness of the information contained in each QPL and RAM submittal and shall ensure that all material, equipment or method of work shall be as described in the QPL and approved RAM. The Contractor shall verify that all features of all products conform to the requirements of the Contract and Plans. The Contractor shall ensure that there is no conflict with other submittals and

specifically notify the Contracting Agency in each case where the Contractor's submittal may affect the work of another contractor or the Contracting Agency. The Contractor shall ensure coordination of submittals among the related crafts and subcontractors. If the Contractor proposes to provide material, equipment, or a method of work, which deviates from the Contract, the Contractor shall indicate so on the transmittal form accompanying the QPL and/or RAM submittals and submit a written request to the Engineer for approval of the proposed substitution.

Submittals required for the Work shall include any or all of the following, as required by the Contract:

a. Manufacturer's literature
b. Shop drawings
c. Material samples
d. Test reports

Timing of Product Submittals

All submittal information shall be sent to the Engineer through the Contractor.

All submittals shall be provided far enough in advance of installation to allow sufficient time for reviews and necessary approvals.

The Contractor shall allow at least 14 calendar days for the Engineer's review of all submittals.

Number of Submittals

The Contractor shall submit four (min.) copies of each QPL and RAM submittal. One (min.) copy will be returned to the Contractor and three (min.) will be retained by the Contracting Agency and Engineer. In lieu of submitting hard copies the Contractor may submit QPLs and RAMs electronically.

Resubmittals

When a submittal is resubmitted for any reason, it shall be resubmitted referencing the previous RAM # and the number of times it has been resubmitted (RAM # - times resubmitted).

Delays

All costs of delays caused by the failure of the Contractor to provide submittals in a timely manner will be borne by the Contractor.

Payment

The cost to prepare and submit submittals, equipment manuals, testing, and materials samples shall be included in the bid prices for various items associated with the required submittals.

1-06.1(2) Request for Approval of Material (RAM)
(June 16, 2006 G&O GSP)

This Section is supplemented with the following:

Submittal Information
Shop, catalog, and other appropriate drawings shall be submitted to the Engineer for review prior to fabrication or ordering of all equipment or materials specified. Submittal documents shall be clearly edited to indicate only those items, models, or series of materials or equipment which are being submitted for review. All extraneous materials shall be crossed out or otherwise obliterated.

Shop drawings shall be submitted in the form of blue-line or black-line prints of each sheet. Blueprint submittals will not be acceptable.

All shop drawings shall be accurately drawn to a scale sufficiently large enough to show pertinent features and methods of connection or jointing. Figure dimensions shall be used on all shop drawings, as opposed to scaled dimensions.

All shop drawings shall bear the Contractor's certification that the Contractor has reviewed, checked, and approved the shop drawings.

1-06.2(2)B Financial Incentive
(February 15, 2008 G&O GSP)

Delete the first sentence of the first paragraph of this Section.

1-06.4 Handling and Storing Materials
(June 16, 2006 G&O GSP)

This Section is supplemented with the following:

The Contractor may be required to provide off-site storage of equipment and materials to enable construction to occur at the construction site. The Contractor has full responsibility to secure all off-site storage areas, if needed, and shall include the costs for providing such storage areas in the Proposal for the individual equipment and material bid items requiring off-site storage. All off-site storage areas shall be fenced, secure and have access restricted or withheld from the general public.

1-06.6 Recycled Materials
(January 4, 2016 APWA GSP)

Delete this Section in its entirety.

1-07 LEGAL RELATIONS AND RESPONSIBILITIES TO THE PUBLIC

1-07.1 Laws to be Observed
(June 16, 2006 G&O GSP)

This Section is supplemented with the following:

In cases of conflict between different safety regulations, the more stringent regulation shall apply.

The Washington State Department of Labor and Industries shall be the sole and paramount administrative agency responsible for the administration of the provisions of the Washington Industrial Safety and Health Act of 1973 (WISHA).

All Work under this Contract shall be performed in a safe manner. The Contractor and all Subcontractors shall observe all rules and regulations of the Washington State Department of Labor and Industries, rules and regulations of OSHA, WISHA or any other jurisdiction, and all other applicable safety standards. The Contractor shall be solely and completely responsible for conditions of the job site, including safety of all persons and property during performance of the Work. This requirement shall apply continuously and not be limited to normal working hours.

The Engineer's review of the Contractor's work plan, safety plan, construction sequence, schedule or performance does not and is not

intended to include review or approval of the adequacy of the Contractor's safety measures in, on, or near the construction site. The Engineer does not purport to be a safety expert, is not engaged in that capacity under this Contract, and has neither the authority nor the responsibility to enforce construction safety laws, rules, regulations, or procedures, or to order the stoppage of Work for claimed violations thereof.

The Contractor shall exercise every precaution at all times for the prevention of accidents and the protection of persons (including employees) and property. All exposed moving parts of equipment capable of inflicting injury by accidental contact shall be protected with sturdy removable guards in accordance with applicable safety regulations.

(April 3, 2006)

Confined Space

Confined spaces are known to exist at the following locations:

Catch Basins

The Contractor shall be fully responsible for the safety and health of all on-site workers and compliant with Washington Administrative Code (WAC 296-809).

The Contractor shall prepare and implement a confined space program for the work. No work shall be performed in or adjacent to the confined space until the Contractor has prepared and implemented the confined space program.

All costs to prepare and implement the confined space program shall be included in the bid prices for the various items associated with the confined space work.

1-07.2 Sales Tax

Delete this section, including its subsections, in its entirety and replace it with the following:

1-07.2 Sales Tax

(June 27, 2011 APWA GSP)

The Washington State Department of Revenue has issued special rules on the State sales tax. Sections 1-07.2(1) through 1-07.2(3) are meant to clarify those rules. The Contractor should contact the Washington State Department of Revenue for answers to questions in this area. The Contracting Agency will not adjust its payment if the Contractor bases a bid on a misunderstood tax liability.

The Contractor shall include all Contractor-paid taxes in the unit bid prices or other contract amounts. In some cases, however, state retail sales tax will not be included. Section 1-07.2(2) describes this exception.

The Contracting Agency will pay the retained percentage (or release the Contract Bond if a FHWA funded project) only if the Contractor has obtained from the Washington State Department of Revenue a certificate showing that all contract-related taxes have been paid (RCW 60.28.051). The Contracting Agency may deduct from its payments to the Contractor any amount the Contractor may owe the Washington State Department of Revenue, whether the amount owed relates to this contract or not. Any amount so deducted will be paid into the proper State fund.

1-07.2(1) State Sales Tax — Rule 171

WAC 458-20-171, and its related rules, apply to building, repairing, or improving streets, roads, etc., which are owned by a municipal corporation, or political subdivision of the state, or by the United States, and which are used primarily for foot or vehicular traffic. This includes storm or combined sewer systems within and included as a part of the street or road drainage system and power lines when such are part of the roadway lighting system. For work performed in such cases, the Contractor shall include Washington State Retail Sales Taxes in the various unit bid item prices, or other contract amounts, including those that the Contractor pays on the purchase of the materials, equipment, or supplies used or consumed in doing the work.

1-07.2(2) State Sales Tax — Rule 170

WAC 458-20-170, and its related rules, apply to the constructing and repairing of new or existing buildings, or other structures, upon real property. This includes, but is not limited to, the construction of streets, roads, highways, etc., owned by the state of Washington; water mains and their appurtenances; sanitary sewers and sewage disposal systems unless such sewers and disposal systems are within, and a part of, a street or road drainage system; telephone, telegraph, electrical power distribution lines, or other conduits or lines in or above streets or roads, unless such power lines become a part of a street or road lighting system; and installing or attaching of any article of tangible personal property in or to real property, whether or not such personal property becomes a part of the realty by virtue of installation.

For work performed in such cases, the Contractor shall collect from the Contracting Agency, retail sales tax on the full contract price. The Contracting Agency will automatically add this sales tax to each payment to the Contractor. For this reason, the Contractor shall not include the retail sales tax in the unit bid item prices, or in any other contract amount subject to Rule 170, with the following exception.

Exception: The Contracting Agency will not add in sales tax for a payment the Contractor or a subcontractor makes on the purchase or rental of tools, machinery, equipment, or consumable supplies not integrated into the project. Such sales taxes shall be included in the unit bid item prices or in any other contract amount.

1-07.2(3) Services

The Contractor shall not collect retail sales tax from the Contracting Agency on any contract wholly for professional or other services (as defined in Washington State Department of Revenue Rules 138 and 244).

1-07.5 Environmental Regulations

This Section is supplemented with the following:

Environmental Commitments
(September 20, 2010)
The following Provisions summarize the requirements, in addition to those required elsewhere in the Contract, imposed upon the Contracting Agency by the various documents referenced in the Special Provision PERMITS AND LICENSES. Throughout the work, the Contractor shall comply with the following requirements:

(August 3, 2009)
Payment
All costs to comply with this special provision for the environmental commitments and requirements are incidental to the contract and are the responsibility of the Contractor. The Contractor shall include all related costs in the associated bid prices of the contract.

1-07.6 Permits and Licenses

(January 2, 2018)
The Contracting Agency has obtained the below-listed permit(s) for this project. A copy of the permit(s) is attached as an appendix for informational purposes. Copies of these permits, including a copy of the Transfer of Coverage form, when applicable, are required to be onsite at all times.

1-07.7 Load Limits
(March 13, 1995)

This Section is supplemented with the following:

If the sources of materials provided by the Contractor necessitate hauling over roads other than Contracting Agency roads, the Contractor shall, at the Contractor's expense, make all arrangements for the use of the haul routes.

1-07.13 Contractor's Responsibility for Work
(March 31, 2010 G&O GSP)

1-07.13(1) General

Delete this Section in its entirety and replace it with the following:

All work and material for the contract, including any change order work, shall be at the sole risk of the Contractor until the entire improvement has been completed as determined by the Engineer, except as provided in this Section.

The Contractor shall rebuild, repair, restore, and make good all damages to any portion of the permanent or temporary work occurring before the physical completion date and shall bear all the expense to do so.

If the performance of the work is delayed as a result of damage by others, an extension of time will be evaluated in accordance with Section 1-08.8.

Nothing contained in this Section shall be construed as relieving the Contractor of responsibility for, or damage resulting from, the Contractor's operations or negligence, nor shall the Contractor be relieved from full responsibility for making good any defective work or materials as provided for under Section 1-05.

1-07.16 (1) Private/Public Property
(August 1, 2009 G&O GSP)

This Section is supplemented with the following:

The Contractor shall keep the Work site, staging areas, and Contractor's facilities clean and free from rubbish and debris. Materials and equipment shall be removed from the site when they are no longer necessary.

Damage and Claims

Along the street to be improved there are privately owned improvements on the properties abutting the right-of-way. Even though all reasonable precaution is to be taken by the Contractor, these improvements may in some instances be damaged. In the event such occurs, and claims for damages are filed by the property owners, the Contracting Agency will request the Contractor to provide evidence that the Contractor has requested its insurance company to contact the claimant. Any settlement for claims for damage to private property shall be by and between the claimant, the Contractor, and the Contractor's insurance company.

1-07.17 Utilities and Similar Facilities
(January 3, 2012)

This Section is supplemented with the following:

Locations and dimensions shown in the Plans for existing facilities are in accordance with available information obtained without uncovering, measuring, or other verification.

Utility Locations

The following addresses and telephone numbers of utility companies known or suspected of having facilities within the project limits are supplied for the Contractor's convenience.

Power PSE Fremont Aguinaldo (425) 223-0936 fremont.aguinaldo@pse.com	Cable Comcast Raymond Pilkenton (425) 263-5332 ray_pilkenton@cable.comcast.com
Water and Sewer City of Bellevue Abe Santos (425) 452-6456 asantos@bellevuewa.gov	Communications CenturyLink Amy Alliston (206) 345-3966 amy.alliston@centurylink.com

1-07.17(2) Utility Construction, Removal, or Relocation by Others
(February 15, 2008 G&O GSP)

Delete this Section in its entirety and replace with the following:

Any authorized agent of the Contracting Agency or utility owners may enter the right-of-way to repair, rearrange, alter, or connect their equipment. The Contractor shall cooperate with such effort and shall avoid creating delays or hindrances to those doing the work. As needed, the Contractor shall arrange to coordinate work schedules.

The Contractor shall carry out the Work in a way that will minimize interference and delay for all forces involved. Any costs incurred prior to the utility owners anticipated completion (or if no completion is specified, within a reasonable period of time) that results from the coordination and prosecution of the Work regarding utility adjustment, relocation, replacement, or construction shall be at the Contractor's expense as provided in Section 1-05.14.

The Contractor shall coordinate all work with the various utility companies and their Contractors. The Contractor, when scheduling his work crews, shall use production rates that anticipate the need to provide block-outs and/or gaps in the driveways, curb and gutter, and/or pavement sections where existing utility structures currently exist, and then come back at a later time to construct the missing sections after the utility has been relocated or adjusted by the applicable utility. The Contractor shall assume that the utilities will not be relocated prior to construction of this project nor at his convenience during the course of construction. As such, the Contractor shall assume such, and schedule his crews and his subcontractors to remobilize to the various sites and temporarily relocate his or his subcontractor's crews to other areas of the project and complete other unaffected portions of the project in order to coordinate the relocation of the utilities with the various utility companies. There shall be no additional money or time due the Contractor for leaving gaps or for buck-out construction, remobilization, demobilization, out of sequence construction, relocation of work crews, and construction of curb, gutter, or driveway patches after the utility has been relocated. It is the intent of these Specifications that the Contractor diligently pursue other work on the site when such conflicts occur and recognize and plan for the inherent inefficiencies and impaired production rates.

Payment

All costs to comply with this Section and repair specified in this Section, unless otherwise stated, are incidental to the Contract and are the responsibility of the Contractor. The Contractor shall include all related costs in the bid prices of the Contract.

1-07.18 Public Liability and Property Damage Insurance
(January 4, 2016 G&O GSP)

Delete this Section and replace it with the following:

1-07.18(1) General Requirements

A. The Contractor shall procure and maintain insurance described in all subsections of 1-07.18 of these Special Provisions, from insurers with a current A.M. Best rating not less than A – VII and licensed to do business in the state of Washington. The Contracting Agency reserves the right to approve or reject the insurance provided, based on the insurer (including financial condition), terms and coverage, the Certificate of Insurance, and/or endorsements.

B. The Contractor shall keep this insurance in force during the term of the Contract and for thirty (30) days after the Physical Completion Date, unless otherwise indicated.

C. All insurance coverage required by this section shall be written and provided by “occurrence-based” policy forms rather than by “claims made” forms.

D. The insurance policies shall contain a “cross liability” provision.

E. The Contractor’s and all subcontractors’ insurance coverage shall be primary and non-contributory insurance as respects the Contracting Agency’s insurance, self-insurance, or insurance pool coverage. Any insurance, self-insurance or self-insured pool coverage maintained by the Contracting Agency shall be excess of the Contractor’s insurance and shall not contribute with it.

F. The Contractor shall provide the Contracting Agency and all Additional Insured with written notice of any policy cancellation and the date of effective cancellation within 2 business days of receipt.

G. The Contractor shall not begin work under the Contract until the required insurance has been obtained and approved by the Contracting Agency.

H. Failure on the part of the Contractor to maintain the insurance as required shall constitute a material breach of Contract, upon which the Contracting Agency may, after giving five business days notice to the Contractor to correct the breach, immediately terminate the Contract or, at its discretion, procure or renew such insurance and pay any and all premiums in connection therewith, with any sums so expended to be repaid to the Contracting Agency on demand, or at the sole discretion of the Contracting Agency, offset against funds due the Contractor from the Contracting Agency.

I. All costs for insurance shall be incidental to and included in the unit or lump sum prices of the Contract and no additional payment will be made.

1-07.18(2) Additional Insured

All insurance policies, with the exception of Workers Compensation, shall name the following listed entities as additional insured(s) using the forms or endorsements required herein:

- The Contracting Agency and its officers, elected officials, employees, agents, and volunteers;
- Gray & Osborne, Inc.

The above-listed entities shall be additional insured(s) for the full available limits of liability maintained by the Contractor, irrespective of whether such limits maintained by the Contractor are greater than those required by this Contract, and irrespective of whether the Certificate of Insurance provided by the Contractor pursuant to 1-07.18(4) describes limits lower than those maintained by the Contractor.

1-07.18(3) Subcontractors

Contractor shall ensure that each subcontractor of every tier obtains and maintains at a minimum the insurance coverages listed in 1-07.18(5)A and 1-07.18(5)B. Upon request of the Contracting Agency, the Contractor shall provide evidence of such insurance.

1-07.18(4) Verification of Coverage

The Contractor shall deliver to the Contracting Agency a Certificate(s) of Insurance and endorsements for each policy of insurance meeting the requirements set forth herein when the Contractor delivers the signed Contract for the work. The certificate and endorsements must conform to the following requirements:

1. An ACORD certificate or a form determined by the Contracting Agency to be equivalent. The certificate or an endorsement form shall indicate the Contractor's insurance is primary and non-contributory.

2. The Contractor shall obtain endorsement forms CG 2010 10 01, CG 2032 07 04 and CG 2037 10 01 or the equivalent of each, naming the Contracting Agency and all other entities listed in 1-07.18(2) as Additional Insured(s) and showing the policy number. If the Contractor is unsuccessful in securing these endorsements after exerting commercially reasonable efforts, the Contractor shall obtain other endorsements providing equivalent protection to the Additional Insured. Commercially reasonable efforts shall be evidenced by a signed statement by the Contractor's insurance broker indicating that endorsement forms CG 2010 10 01, CG 2032 07 04 and CG 2037 10 01 are not available and the endorsements submitted provide equivalent protection to the Additional Insured.

3. Any other amendatory endorsements to show the coverage required herein.

4. A notation of coverage enhancements on the Certificate of Insurance shall not satisfy these requirements; actual endorsements must be submitted.

Upon request, the Contractor shall forward to the Contracting Agency a full and certified copy of the insurance policy(s). If Builders Risk Insurance is required on this Project, a full and certified copy of that policy is required when the Contractor delivers the signed Contract for the Work.

1-07.18(5) Coverages and Limits

The insurance shall provide the minimum coverages and limits set forth below. Providing coverage in these stated minimum limits shall not be construed to relieve the Contractor from liability in excess of such limits. All deductibles and self-insured retentions must be disclosed and are subject to approval by the Contracting Agency. The cost of any claim payments falling within the deductible shall be the responsibility of the Contractor.

1-07.18(5)A Commercial General Liability

Commercial General Liability insurance shall be written on coverage forms at least as broad as ISO occurrence form CG 00 01, including but not limited to liability arising from premises, operations, stop gap liability, independent contractors, products-completed operations, personal and advertising injury, and liability assumed under an insured contract. There shall be no exclusion for liability arising from explosion, collapse or underground property damage.

The Commercial General Liability insurance shall be endorsed to provide a per project general aggregate limit, using ISO form CG 25 03 05 09 or an equivalent endorsement.

Contractor shall maintain Commercial General Liability Insurance arising out of the Contractor's completed operations for at least three years following Substantial Completion of the Work.

Such policy must provide the following minimum limits:

$1,000,000	Each Occurrence
$2,000,000	General Aggregate
$2,000,000	Products & Completed Operations Aggregate
$1,000,000	Personal & Advertising Injury, each offence
$1,000,000	Stop Gap/Employers' Liability

1-07.18(5)B Automobile Liability

Automobile Liability for owned, non-owned, hired, and leased vehicles, with an MCS 90 endorsement and a CA 9948 endorsement attached if "pollutants" are to be transported. Such policy(ies) must provide the following minimum limit:

$1,000,000	combined single limit each accident

1-07.18(5)C Workers' Compensation

The Contractor shall comply with Workers' Compensation coverage as required by the Industrial Insurance laws of the state of Washington.

1-07.18(5)D Excess or Umbrella Liability

The Contractor shall provide Excess or Umbrella Liability coverage with limits not less than $2 million per occurrence and annual aggregate. This excess or umbrella liability coverage shall be excess over and at least as broad in coverage as the Contractor's Commercial General and Auto Liability insurance.

This requirement may be satisfied instead through the Contractor's primary Commercial General and Automobile Liability coverage, or any combination thereof.

1-07.18(5)E Builders Risk Insurance

The Contractor shall purchase and maintain Builders Risk insurance covering interests of the Contracting Agency, the Contractor, Subcontractors, and Sub-subcontractors in the work. Builders Risk shall be required for all structures on the project. A structure is any equipment, facility, building, bridge, retaining wall, or tank extending four feet or more above adjacent grade; or any facility less than four feet above adjacent grade, designed for human access, and containing more than $50,000 worth of electrical or mechanical equipment. Poles, light standards, or antenna less than 50 feet in height and less than two feet in diameter shall not be considered structures. Builders Risk insurance, when required, shall be on an all-risk policy form and shall insure against the perils of fire and extended coverage and physical loss or damage including flood, earthquake, theft, vandalism, malicious mischief and collapse. The Builders Risk insurance, when required, shall include coverage for temporary buildings, debris removal, and damage to materials in transit or stored off-site. Such insurance shall cover "soft costs" including but not limited to design costs, licensing fees, and architect's and engineer's fees. Builders Risk insurance shall be written in the amount of the completed value of the applicable portions of the project, with no coinsurance provisions.

The Builders Risk insurance covering the Work shall have a deductible of $5,000 for each occurrence, which will be the responsibility of the Contractor. Higher deductibles for flood, earthquake and all other perils may be accepted by the Contracting Agency upon written request by the Contractor and written acceptance by the Contracting Agency. Any

increased deductibles accepted by the Contracting Agency will remain the responsibility of the Contractor.

The Builders Risk insurance shall be maintained until the Physical Completion Date.

The Contractor and the Contracting Agency waive all rights against each other and any of their Subcontractors, Sub-subcontractors, agents and employees, each of the other, for damages caused by fire or other perils to the extent covered by Builders Risk insurance or other property insurance applicable to the work. The policies shall provide such waivers by endorsement or otherwise.

Liability for facilities not covered by Builders Risk shall remain the responsibility of the contractor.

1-07.23 Public Convenience and Safety

1-07.23(1) Construction Under Traffic

(May 7, 2007 G&O GSP)

Delete the second paragraph of this Section and replace it with the following:

To disrupt public traffic as little as possible, the Contractor shall permit traffic to pass through the Work with the least possible inconvenience or delay. The Contractor shall maintain existing roads, streets, sidewalks, and paths within the project limits, keeping them open, and in good, clean, safe condition at all times. Deficiencies caused by the Contractor's operations shall be repaired at the Contractor's expense. Deficiencies not caused by the Contractor's operations shall be repaired by the Contractor when directed in writing by the Engineer, at the Contracting Agency's expense. The Contractor shall also maintain roads, streets, sidewalks, and paths adjacent to the project limits when affected by the Contractor's operations. Snow and ice control will be performed by the Contracting Agency or the Project will be shutdown at the Contracting Agency's discretion. The Contractor shall perform the following:

1. Remove or repair any condition resulting from the Work that might impede traffic or create a hazard.

2. Keep existing traffic signal and street lighting systems in operation as the Work proceeds.

3. Maintain the striping on the roadway.

4. Maintain existing permanent signing.

5. Keep drainage systems clean and allow for unobstructed flow of water.

(January 2, 2012)
This Section is supplemented with the following:

Work Zone Clear Zone
The Work Zone Clear Zone (WZCZ) applies during working and nonworking hours. The WZCZ applies only to temporary roadside objects introduced by the Contractor's operations and does not apply to preexisting conditions or permanent Work. Those work operations that are actively in progress shall be in accordance with adopted and approved Traffic Control Plans, and other contract requirements.

During nonworking hours equipment or materials shall not be within the WZCZ unless they are protected by permanent guardrail or temporary concrete barrier. The use of temporary concrete barrier shall be permitted only if the Engineer approves the installation and location.

During actual hours of work, unless protected as described above, only materials absolutely necessary to construction shall be within the WZCZ and only construction vehicles absolutely necessary to construction shall be allowed within the WZCZ or allowed to stop or park on the shoulder of the roadway.

The Contractor's nonessential vehicles and employees private vehicles shall not be permitted to park within the WZCZ at any time unless protected as described above.

Deviation from the above requirements shall not occur unless the Contractor has requested the deviation in writing and the Engineer has provided written approval.

Minimum WZCZ distances are measured from the edge of traveled way and will be determined as follows:

Regulatory Posted Speed	Distance From Traveled Way (Feet)
35 mph or less	10*
40 mph	15
45 to 55 mph	20
60 mph or greater	30

*Or 2-feet beyond the outside edge of sidewalk

Minimum Work Zone Clear Zone Distance

1-07.24 Rights of Way
(November 30, 2015 G&O GSP)

Delete this section in its entirety, and replace it with the following:

Street right of way lines, limits of easements, and limits of construction permits are indicated in the Plans. The Contractor's construction activities shall be confined within these limits, unless arrangements for use of private property are made.

Generally, the Contracting Agency will have obtained, prior to bid opening, all rights of way and easements, both permanent and temporary, necessary for carrying out the work. Exceptions to this are noted in the Bid Documents or will be brought to the Contractor's attention by a duly issued Addendum.

Whenever any of the work is accomplished on or through property other than public right of way, the Contractor shall meet and fulfill all covenants and stipulations of any easement agreement obtained by the Contracting Agency from the owner of the private property. Copies of the easement agreements may be included in the Contract Provisions or made available to the Contractor as soon as practical after they have been obtained by the Engineer.

The Contractor shall not proceed with any portion of the work in areas where right of way, easements or rights of entry have not been acquired until the Engineer certifies to the Contractor that the right of way or easement is available or that the right of entry has been received.

The Contractor shall be responsible for providing, without expense or liability to the Contracting Agency, any additional land and access thereto that the Contractor may desire for temporary construction facilities, storage of materials, or other Contractor needs. However, before using any private

property, whether adjoining the work or not, the Contractor shall file with the Engineer a written permission of the private property owner, and, upon vacating the premises, a written release from the property owner of each property disturbed or otherwise interfered with by reasons of construction pursued under this contract. The statement shall be signed by the private property owner, or proper authority acting for the owner of the private property affected, stating that permission has been granted to use the property and all necessary permits have been obtained or, in the case of a release, that the restoration of the property has been satisfactorily accomplished. The statement shall include the parcel number, address, and date of signature. Written releases must be filed with the Engineer before the Completion Date will be established.

PUBLIC NOTIFICATION

Each property owner shall be given a minimum of 2 working days notice prior to entry upon the owner's property by the Contractor. This includes entry onto easements and private property where private improvements must be adjusted.

The Contractor shall notify all residents and businesses within 300 feet from the edge of the Work area prior the performing any Work under this Contract.

Notification shall be made to ensure that:

1. Parked vehicles are moved;

2. The public is aware that access may be temporarily impeded;

3. The public is aware that private improvements within the Work area may be impacted.

Notification shall be as follows:

A. Pre-notification to residents, and businesses shall be provided indicating the Contractor's intended construction schedule. This notification shall precede the work by a minimum of 10 calendar days. Wording shall be approved by the Contracting Agency prior to the performance of any Work.

B. Final notification shall state the exact construction start date, after which any private improvements that remain within the right-of-way and/or easements will be subject to removal or

relocation by the Contractor as indicated on the Plans and Section 1-07.16. This notification shall be made a minimum of 2 working days in advance of the construction start date.

Any delay or shut down in the continuous prosecution of the Work, as specified, shall require another notification as described herein.

Payment

All costs to comply with this Section are incidental to the Contract and are the responsibility of the Contractor. The Contractor shall include all related costs in the bid prices of the Contract.

1-08 PROSECUTION AND PROGRESS

Add the following new section:

1-08.0 Preliminary Matters (New Section)

(May 25, 2006 APWA GSP)

1-08.0(1) Preconstruction Conference

(October 10, 2008 G&O GSP)

Prior to the Contractor beginning the Work, a preconstruction conference will be held between the Contractor, the Contracting Agency, the Engineer and such other persons as may be invited. The purpose of the preconstruction conference will be:

1. To review the initial progress schedule;

2. To establish a working understanding among the various persons associated with or affected by the Work;

3. To establish and review procedures for progress payment, notifications, approvals, submittals, etc.;

4. To establish normal working hours for the Work;

5. To review traffic control; and

6. To discuss such other related items as may be pertinent to the Work.

The Contractor shall prepare and submit the following to the Engineer at the preconstruction meeting:

1. Breakdown of all lump sum items in the Proposal;

2. A preliminary schedule for working drawing submittals; and

3. A list of material sources for approval, if applicable.

Add the following new section:

1-08.0(2) Hours of Work
(December 8, 2014 APWA GSP)

Except in the case of emergency or unless otherwise approved by the Engineer, the normal working hours for the Contract shall be any consecutive 8-hour period between 7:00 a.m. and 6:00 p.m. Monday through Friday, exclusive of a lunch break. If the Contractor desires different than the normal working hours stated above, the request must be submitted in writing prior to the preconstruction conference, subject to the provisions below. The working hours for the Contract shall be established at or prior to the preconstruction conference.

All working hours and days are also subject to local permit and ordinance conditions (such as noise ordinances).

If the Contractor wishes to deviate from the established working hours, the Contractor shall submit a written request to the Engineer for consideration. This request shall state what hours are being requested, and why. Requests shall be submitted for review no later than 48 hours prior to the day(s) the Contractor is requesting to change the hours.

If the Contracting Agency approves such a deviation, such approval may be subject to certain other conditions, which will be detailed in writing. For example:

1. On non-Federal aid projects, requiring the Contractor to reimburse the Contracting Agency for the costs in excess of straight-time costs for Contracting Agency representatives who worked during such times. (The Engineer may require designated representatives to be present during the work. Representatives who may be deemed necessary by the Engineer include, but are not limited to: survey crews; personnel from the Contracting Agency's material testing lab; inspectors; and other Contracting Agency employees or third party

consultants when, in the opinion of the Engineer, such work necessitates their presence.)

2. Considering the work performed on Saturdays, Sundays, and holidays as working days with regard to the contract time.

3. Considering multiple work shifts as multiple working days with respect to contract time even though the multiple shifts occur in a single 24-hour period.

4. If a 4-10 work schedule is requested and approved the non working day for the week will be charged as a working day.

5. If Davis Bacon wage rates apply to this Contract, all requirements must be met and recorded properly on certified payroll

1-08.1 Subcontracting
(May 30, 2019 APWA GSP, Option B)

Delete the ninth paragraph, beginning with "On all projects, the Contractor shall certify…".

1-08.3(2)A Type A Progress Schedule
(March 13, 2012 APWA GSP)

Revise this section to read:

The Contractor shall submit five copies of a Type A Progress Schedule no later than at the preconstruction conference, or some other mutually agreed upon submittal time. The schedule may be a critical path method (CPM) schedule, bar chart, or other standard schedule format. Regardless of which format used, the schedule shall identify the critical path. The Engineer will evaluate the Type A Progress Schedule and approve or return the schedule for corrections within 15 calendar days of receiving the submittal.

1-08.3(2)D Weekly Look Ahead Schedule
(August 2009 G&O GSP)

This Section is supplemented with the following:

The Contractor shall attend a weekly construction meeting with the Contracting Agency. The meeting will include discussion of the weekly look ahead schedule, status of the work, utility coordination, and traffic control.

The Contractor's superintendent/foreman shall attend and participate in the weekly construction meeting.

1-08.4 Prosecution of Work
(February 15, 2008 G&O GSP)

Delete the first sentence of this Section and replace with the following:

The Contract time shall begin on the first working day following the 10th calendar day after the issuance of the written notice to proceed or the first day on which the Contractor begins to perform Work on the site, whichever first occurs.

1-08.5 Time for Completion
(November 12, 2012 G&O GSP)

Delete this Section in its entirety and replace with the following:

The Contractor shall complete all Contract Work within the number of "working days" stated in the Contract Provisions or as extended by the Engineer in accordance with Section 1-08.8. Every day will be counted as a "working day" unless it is a nonworking day or an Engineer determined unworkable day. A nonworking day is defined as a Saturday, a Sunday, a day on which the Contract specifically suspends Work, or one of these holidays: January 1, the third Monday of January, the third Monday of February, Memorial Day, July 4, Labor Day, November 11, Thanksgiving, the day after Thanksgiving, and Christmas Day. When any of these holidays fall on a Sunday, the following Monday shall be counted a nonworking day. When the holiday falls on a Saturday, the preceding Friday shall be counted a nonworking day. The days between December 25 and January 1 will be classified as nonworking days, provided the Contractor actually suspends performance of the Work.

Any unworkable day is defined as a half or whole day the Engineer declares to be unworkable because of weather or conditions caused by the weather that prevents satisfactory and timely performance of the Work. If the Contractor works, regardless of the weather, that day shall be counted as a working day. Other conditions beyond the control of the Contractor may qualify for an extension of time in accordance with Section 1-08.8.

The Contract time shall begin on the first working day following the 10th calendar day after the issuance of the written notice to proceed or the first day on which the Contractor begins to perform Work on the site, whichever first occurs. The Contract Provisions may specify another starting date for

the Contract time, in which case time will begin on the starting date specified.

Each working day shall be charged to the Contract as it occurs until the Work is physically complete. If requested by the Contractor in writing, the Engineer will provide the Contractor with a weekly statement that shows the number of working days: (1) charged to the Contract the week before; (2) specified for the substantial and physical completion of the Contract; and (3) remaining for the substantial and physical completion of the Contract. The statement will also show the nonworking days and any partial or whole days that the Engineer determines to be unworkable. If the Contractor disagrees with any statement issued by the Engineer, the Contractor shall submit a written protest within 10 calendar days after the date of the statement. The protest shall be sufficiently detailed to enable the Engineer to ascertain the basis for the dispute and the amount of time disputed. Any statement that is not protested by the Contractor as required in this Section shall be deemed as having been accepted. If the Contractor elects to work 10 hours a day for four days a week (a 4-10 schedule), the fifth day of the week of that week will be charged as a working day if that day would be chargeable as a working day if the Contractor had not elected to utilize the 4-10 schedule.

The Engineer will give the Contractor written notice of the Completion Date of the Contract after all of the Contractor's obligations under the Contract have been performed by the Contractor. The following events must occur before the Completion Date will be established:

1. The physical Work on the project must be complete; and

2. The Contractor must furnish all documentation required by the Contract and required by law, to allow the Contracting Agency to process final acceptance of the Contract. The following documents must be received by the Project Engineer prior to establishing a Completion Date:

    a. Certified payrolls (per Section 1-07.9(5));

    b. Material acceptance certification documents;

    c. Final Contract Voucher certification;

    d. Property owner releases required by Section 1-07.24.

e. Affidavits of Wages Paid for the Contractor and all subcontractors must be submitted to the Contracting Agency.

1-08.8 Extension of Time
(February 15, 2008 G&O GSP)

Delete Item 6 of the third paragraph and replace it with the following:

6. If the actual quantity of Work performed for a bid item was more than the original Plan quantity and increased the duration of a critical activity, and if the total extended bid price for that item at time of award was equal to or greater than 10 percent of the total Contract price at time of award. Extensions of time will be limited to only those bid items where the quantity exceeded the original Plan quantity by 25 percent or more.

1-08.9 Liquidated Damages
(June 16, 2006 G&O GSP)

Delete this Section and replace it with the following:

Time is of the essence of this Contract. All of the Work shall be completed within the time limits set forth in the Contract, and the Contractor's unexcused failure to do so shall result in liquidated damages being assessed as provided in the Contract Provisions.

a. The Contractor acknowledges that the Contracting Agency will suffer monetary damages in the event of an unexcused delay in the substantial completion and physical completion of the Work. If the Contractor fails, without excuse under the Contract, or otherwise refuses to complete the Work within the Contract time, or any extension thereof granted by the Contracting Agency, the Contractor agrees to pay to the Contracting Agency the amount specified in the Contract Provisions, not as a penalty, but as liquidated damages for such breach of the Contract, for each and every calendar day that the Contractor shall be in default after the time stipulated in the Contract for substantial completion of the Work.

b. The amount of liquidated damages is fixed and agreed upon by and between the Contractor and the Contracting Agency because of the impracticability and extreme difficulty of determining the actual damages that the Contracting Agency

would sustain. The amount of liquidated damages is specifically agreed to be a reasonable approximation of the damages which the Contracting Agency would sustain as a result of an unexcused delay in the substantial completion and the physical completion of the Work. The Contracting Agency may retain liquidated damages from progress payments that otherwise would be due to the Contractor.

1-09 MEASUREMENT AND PAYMENT

1-09.2(1) General Requirements for Weighing Equipment

(July 23, 2015 APWA GSP, Option 2)

Revise item 4 of the fifth paragraph to read:

4. Test results and scale weight records for each day's hauling operations are provided to the Engineer daily. Reporting shall utilize WSDOT form 422-027, Scaleman's Daily Report, unless the printed ticket contains the same information that is on the Scaleman's Daily Report Form. The scale operator must provide AM and/or PM tare weights for each truck on the printed ticket.

1-09.2(5) Measurement

(May 2, 2017 APWA GSP)

Revise the first paragraph to read:

Scale Verification Checks – At the Engineer's discretion, the Engineer may perform verification checks on the accuracy of each batch, hopper, or platform scale used in weighing contract items of Work.

1-09.6 Force Account

(June 16, 2006 G&O GSP)

Delete this Section and replace it with the following:

The cost to be included in the equitable adjustment for any changes directed or approved in accordance with Section 1-04.4, will be determined by one or more of the following methods:

a. Contract unit bid prices previously approved; or

b. If there are no unit bid prices, an agreed lump sum; or

c. If the amount of the adjustment cannot be agreed upon in advance or in the manner provided in subparagraph a. or b. above, the cost will be determined by the actual cost of:

1. Labor including working foremen. Labor rates will include the basic wage and fringe benefits, current rates for Federal Insurance Compensation Act (FICA), Federal Unemployment Tax Act (FUTA) and State Unemployment Tax Act (SUTA), and the company's present rates for medical aid and industrial insurance premiums;

2. Materials and equipment incorporated permanently into the Work;

3. The ownership or rental cost of equipment during the time of use on the extra Work. Equipment rates shall be as set forth in the then current AGC/WSDOT Equipment Rental Agreement. These rates shall be full compensation for all costs incidental to furnishing and operating the equipment. The Contractor shall submit copies of applicable portions of the AGC/WSDOT Equipment Rental Agreement to the Engineer; plus

4. Overhead and Profit as follows:

For Work performed by the Contractor, an amount to be agreed upon but not to exceed 15 percent of the labor, material, and equipment cost agreed to by the Engineer as compensation for supervision, small tools, provisions for safety, home office and field overhead, profit and other general conditions expenses, including, but not limited to, insurance, bonds and business & occupation taxes.

For Subcontractor work, the Subcontractor will be allowed an amount to be agreed upon but not to exceed 15 percent of the labor, material, and equipment cost agreed to by the Engineer as compensation for supervision, small tools, provisions for safety, home office and field overhead, profit and other general conditions expenses, including, but not limited to, insurance, bonds and business & occupation

taxes. The Contractor will be allowed an additional markup of 10 percent to compensate the Contractor for all administrative costs, including home office and field overhead, profit, bonds, insurance, business & occupation taxes and any other costs incurred.

In no case will the total fixed fee for the Contractor, all Subcontractors of all tiers exceed 30 percent.

(October 10, 2008 APWA GSP)

The Contracting Agency has estimated and included in the Proposal, dollar amounts for all items to be paid per force account, only to provide a common proposal for Bidders. All such dollar amounts are to become a part of Contractor's total bid. However, the Contracting Agency does not warrant expressly or by implication, that the actual amount of work will correspond with those estimates. Payment will be made on the basis of the amount of work actually authorized by Engineer.

1-09.7 Mobilization

(June 6, 2006, G&O GSP)

Delete the second and third paragraph of this Section. This Section is supplemented with the following:

Throughout construction and until the Physical Completion Date, the Contractor shall thoroughly comb and search the Work site and surrounding area and remove any waste construction material, empty containers, litter and other debris, whether or not deposited by the Contractor, and tidy up the surrounding general area to make it neat in appearance.

ROUTINE CLEANING

A. General:

1. Maintain all stored materials and equipment in an orderly fashion allowing maximum access, not impeding drainage, pedestrian or vehicle traffic.

2. Do not allow the accumulation of scrap, waste material, used containers, debris and other items not required for the Work.

3. At least once a week, and more often if necessary, completely remove all scrap, debris, and waste material from the Work site.

4. Provide adequate storage for all materials awaiting removal from the Work site, observing all requirements for fire protection and protection of the environment.

B. Site:

1. Daily, and more often if necessary, inspect the Work site and pick up all scrap, debris, and waste material. Remove all such items to the place designated for their storage until they can be disposed of.

2. Weekly, and more often if necessary, inspect the arrangement of all materials and equipment stored on the Work site, re-stack, tidy or otherwise rearrange them to meet the requirements above.

3. Maintain the Work site at all times in a neat and orderly condition meeting the approval of the Contracting Agency.

FINAL CLEANING

A. General:

Prior to final inspection, remove from the Work site all tools, surplus materials, equipment, scrap, debris and waste. The Contractor shall thoroughly comb and search the surrounding area and remove any debris of any kind and tidy up the general area to make it neat in appearance, including removal of debris not deposited by the Contractor's operations.

Payment

"Mobilization, Cleanup, and Demobilization," lump sum.

The lump sum contract payment shall be full compensation for all costs incurred by the Contractor in performing the Contract Work defined in this Section. Payment for this item shall be made as follows:

1. Fifty percent of this item will be included in the first monthly pay estimate after the Contractor is in full operation and construction of the Work has began;

2. Forty percent of this item will be proportioned equally (based on the number of working days in the Contract) and included in each monthly pay estimate submitted by the Contractor. The Contractor shall provide regular and ongoing cleanup. Failure of the Contractor to provide regular ongoing cleanup will be cause for permanent forfeiture of the monthly payment for each month that the cleanup is not performed as required. If cleanup is not performed during a monthly pay period, it shall not be subject to reimbursement under any following monthly pay estimate, and the lump sum amount due will be adjusted accordingly.

3. Ten percent of this item will be included in the estimate issued when the Physical Completion Date is achieved, including the removal of all equipment from the Work site.

1-09.8 Payment for Material on Hand
(June 16, 2006 G&O GSP)

Delete the first paragraph of this Section and replace it with the following:

The Contracting Agency may reimburse the Contractor for 90 percent of the invoice amount of the material and equipment purchased before their incorporation into the Work if they:

1. Meet the requirements of the Plans and Specifications;

2. Are delivered to or stockpiled near the Work site or to another Engineer-approved storage site; and

3. Consist of: piping material, reinforcing steel, bronze plates, structural steel; machinery; piling, timber and lumber (not including forms and falsework), large signs unique to the Work, prestressed concrete beams or girders, or other material the Engineer may approve.

1-09.9 Payments
(June 27, 2011 G&O GSP)

Delete the fourth paragraph and replace it with the following:

Progress payments for completed work and material on hand will be based upon progress estimates prepared by the Engineer. A progress estimate cutoff date will be established at the preconstruction conference.

The initial progress estimate will be made not later than 30 days after the Contractor commences the work, and successive progress estimates will be made every month thereafter until the Completion Date. Progress estimates made during progress of the work are tentative, and made only for the purpose of determining progress payment. The progress estimates are subject to change at any time prior to the calculation of the Final Payment.

The value of the progress estimate will be the sum of the following:

1. Unit Price Items in the Bid Form — the approximate quantity of acceptable units of work completed multiplied by the unit price.

2. Lump Sum Items in the Bid Form — based on the approved Contractor's lump sum breakdown for that item, or absent such a breakdown, based on the Engineer's determination.

3. Materials on Hand — 90 percent of invoiced cost of material delivered to Job site or other storage area approved by the Engineer.

4. Change Orders — entitlement for approved extra cost or completed extra work as determined by the Engineer.

Progress payments will be made in accordance with the progress estimate less:

1. Retainage per Section 1-09.9(1), on non "FHWA funded" projects;

2. The amount of Progress Payments previously made; and

3. Funds withheld by the Contracting Agency for disbursement in accordance with the Contract Documents.

Progress payments for work performed shall not be evidence of acceptable performance or an admission by the Contracting Agency that any work has been satisfactorily completed. The determination of payments under the contract will be final in accordance with Section 1-05.1.

1-09.11(3) Time Limitation and Jurisdiction
(November 30, 2018 APWA GSP)

Revise this section to read:

For the convenience of the parties to the Contract it is mutually agreed by the parties that any claims or causes of action which the Contractor has against the Contracting Agency arising from the Contract shall be brought within 180 calendar days from the date of final acceptance (Section 1-05.12) of the Contract by the Contracting Agency; and it is further agreed that any such claims or causes of action shall be brought only in the Superior Court of the county where the Contracting Agency headquarters is located, provided that where an action is asserted against a county, RCW 36.01.050 shall control venue and jurisdiction. The parties understand and agree that the Contractor's failure to bring suit within the time period provided, shall be a complete bar to any such claims or causes of action. It is further mutually agreed by the parties that when any claims or causes of action which the Contractor asserts against the Contracting Agency arising from the Contract are filed with the Contracting Agency or initiated in court, the Contractor shall permit the Contracting Agency to have timely access to any records deemed necessary by the Contracting Agency to assist in evaluating the claims or action.

1-10 TEMPORARY TRAFFIC CONTROL

1-10.2(1) General
(December 1, 2008)

This Section is supplemented with the following:

Only training with WSDOT TCS card and WSDOT training curriculum is recognized in the State of Washington. The Traffic Control Supervisor shall be certified by one of the following:

The Northwest Laborers-Employers Training Trust
27055 Ohio Avenue
Kingston, Washington 98346
(360) 297-3035

Evergreen Safety Council
401 Pontius Avenue North
Seattle, Washington 98109
1-800-521-0778 or
(206) 382-4090

The American Traffic Safety Services Association
15 Riverside Parkway, Suite 100
Federicksburg, Virginia 22406-1022
Training Department Toll Free (877) 642-4637
Phone (540) 368-1701

1-10.2(2) Traffic Control Plans
(March 31, 2016 G&O GSP)

This Section is supplemented with the following:

If traffic control plans are not included in the Contract Documents, the Contractor shall submit traffic control plans for the Engineer's review and approval.

1-10.4(1) Lump Sum Bid for Project (No Unit Items)
(August 2, 2004)

This Section is supplemented with the following:

The proposal contains the item "Project Temporary Traffic Control," lump sum. The provisions of Section 1-10.4(1) shall apply.

DIVISION 2

EARTHWORK

2-01 CLEARING, GRUBBING AND ROADSIDE CLEANUP

2-01.1 Description

(December 7, 2006 G&O)

This Section is supplemented with the following:

Clearing and grubbing on this project shall be performed within the following limits:

Within the construction area of NE 42nd Street and 91st Avenue NE, and within the right-of-way, utility easements, and construction easements where required. The area to be cleared and grubbed shall extend to 1 foot beyond the improvements (i.e., toe of fill, top of cut slope, fence, sidewalk, pavement removal area, pavement, curb, etc.) unless indicated otherwise on the Plans. The Contractor shall coordinate with the Engineer to protect and leave in place those trees, landscaping, or other items specifically identified to be saved. Where such is required, the Contractor shall flag those trees, shrubs, etc., to identify to his workforce their need to be saved.

Existing landscaping, including but not limited to, rockeries, beauty bark, decorative gravel or rock, bushes, trees, and shrubbery within and/or adjacent to the work areas shall be protected from damage and/or removed and/or relocated as indicated on the Plans. The Contractor shall provide protection, removal, temporary or permanent relocation, watering, staking, etc., as directed by the Engineer.

Unless indicated otherwise on the Plans, the property owners shall be allowed to remove and/or relocate trees, shrubs, irrigation, wood headers, ornamental plants, and any other decorative landscaping materials within the work areas that they wish to save. The Contractor shall notify both verbally and in writing (by certified mail) all abutting property owners and allow them a minimum of two weeks from the date the property owner is notified for the property owner to remove landscaping within the work area. The Contractor shall submit a checklist to the Contracting Agency verifying notification of property owners of landscaping relocation requirements. The Contractor shall remove and wastehaul all such items not removed by the property owner. Prior to the removal of the landscaping materials, the Contractor must receive approval from the Engineer to begin this work.

If the Contractor removes or damages any existing vegetation, landscaping item or private irrigation system not designated for removal

because of any act, omission, neglect or misconduct in the execution of the work, such items shall be restored or replaced in kind by the Contractor to a condition similar or equal to that existing before such damage or removal occurred.

2-01.2 Disposal of Usable Material and Debris
(December 7, 2006 G&O)

Delete the third paragraph of this Section and replace with the following:

Refuse and debris shall be loaded and hauled to a waste site secured by the Contractor and shall be disposed of in such a manner as to meet all requirements of state, county, and municipal regulations regarding health, safety and public welfare.

2-01.5 Payment
(March 6, 2016 G&O)

This Section is supplemented with the following:

The lump sum contract price for “Clearing and Grubbing” shall include all costs associated with furnishing all labor, materials, tools, and equipment for completion of clearing and grubbing as indicated on the Plans and specified herein including, but not limited to, clearing and grubbing, wastehaul, notification/coordination with property owners and Contracting Agency, protecting landscaping to remain, restoration/replacement of those items identified to be saved that are damaged by the Contractor, and landscaping relocations as indicated on the Plans and specified herein.

2-02 REMOVAL OF STRUCTURES AND OBSTRUCTIONS

2-02.1 Description
(November 24, 2010 G&O)

This Section is supplemented with the following:

This work also consists of removing, handling and disposing of deleterious material or debris encountered during roadway, sidewalk, and trench excavation or other work as indicated on the Plans within the Project site, including, but not limited to, existing pipes, utility structures or appurtenances, riprap, buried concrete including thrust blocks, concrete footings and/or slabs, buried logs or debris, asphalt pavement, cement concrete pavement, sidewalks, fences, landscaping items, rock walls,

guardrail, signs and any and all other structures and obstructions (unless a separate bid item has been provided for this work). All salvageable items shall be removed and delivered to the Contracting Agency unless indicated otherwise on the Plans.

2-02.3 Construction Requirements
(January 7, 2013 G&O)

This Section is supplemented with the following:

The removal of any existing improvements shall be conducted in such a manner as not to damage utilities and any portion of the infrastructure that is to remain in place. Any deviation in this matter will obligate the Contractor at his own expense, to repair, replace or otherwise make proper restoration to the satisfaction of the Contracting Agency.

When sawing of concrete or combinations of materials is required, the depth of cut shall be as required to accomplish the intended purpose, without damaging surfaces to be left in place and will be determined in the field to the satisfaction of the Engineer.

Unless otherwise indicated on the Plans or in the Special Provisions, all structures, castings, pipe and other material of recoverable value removed from the Project site shall be carefully salvaged and delivered to the Owner of said utility items in good condition and in such order of salvage as the Engineer may direct. Materials and other items deemed of no value by the Engineer shall be promptly removed, loaded and wastehauled by the Contractor and becomes his property, to be disposed of at his discretion, in compliance with regulatory requirements.

Waste materials shall be loaded and hauled to a waste site secured by the Contractor and shall be disposed of in such a manner as to meet all requirements of state, county and municipal regulations regarding health, safety and public welfare.

2-02.3(3) Removal of Pavement, Sidewalks, Curbs and Gutters
(January 4, 2010 G&O)

This Section is supplemented with the following:

Existing cement concrete sidewalks, roadway slabs, curbs, and curbs and gutters shall be removed at the nearest construction joint where possible, and removed and wastehauled as required for the construction of this Project. Where directed by the Engineer, cement concrete curbs or curb

and gutter shall be saw-cut prior to removal. Existing pavement shall be precut before commencing excavation and shall be removed as required for the construction.

Where shown on the Plans or where directed in the field by the Engineer, the Contractor shall make a neat vertical saw-cut at the boundaries of the area to be removed. Care shall be taken during sawcutting so as to prevent damage to the existing asphalt concrete, or concrete, to remain in place. Any pavement or concrete damaged by the Contractor outside the area scheduled for removal due to the Contractor's operations or negligence shall be repaired or replaced to the Contracting Agency's satisfaction by the Contractor at no additional cost to the Contracting Agency.

All cuts shall be continuous, full depth, and shall be made with saws specifically equipped for this purpose. No skip cutting or jack hammering will be allowed unless specifically approved otherwise in writing by the Engineer.

Wheel cutting or jack hammering shall not be considered an acceptable means of pavement "cutting," unless pre-approved in writing by the Engineer. However, even if pre-approved as a method of cutting, no payment will be made for this type of work, and it shall be included in the various unit contract and lump sum prices listed in the Proposal.

The location of all pavement cuts shall be pre-approved by the Engineer in the field before cutting commences.

All water and slurry material resulting from sawcutting operations shall not be allowed to enter the storm drainage or sanitary sewer system and shall be removed from the site and disposed of in accordance with the Washington State Department of Ecology regulations.

2-02.5 Payment

(November 24, 2010 G&O)

This Section is supplemented with the following:

All costs for sawcutting as indicated in the Plans and as may be additionally necessary to construct the Project shall be included in the unit contract and lump sum prices as listed in the Proposal. No additional or separate payment will be made for sawcutting.

The lump sum contract price for "Removal of Structure and Obstruction" shall be full compensation for furnishing all tools, labor, equipment, materials, and incidentals necessary for removing, loading, hauling, relocating, disposing of, and/or delivering items as noted herein and directed in the field by the Resident Inspector, to include but not limited to, fees and permits related to disposal.

2-04 HAUL

2-04.1 Description

(June 16, 2006 G&O)

This Section is supplemented with the following:

If the sources of materials provided by the Contractor necessitates hauling over any public roads, the Contractor shall, at the Contractor's expense, make all arrangements for the use of the haul routes. No separate monies will be due the Contractor for this work.

2-07 WATERING

2-07.3 Construction Requirements

(November 24, 2010 G&O)

This Section is supplemented with the following:

During construction, the Contractor shall have dedicated to the Project a suitable water truck that shall be operated as necessary to control dust. Failure to have a water truck immediately accessible to the job and failure to use a water truck for dust control shall be adequate reason for the Engineer to issue a suspension of work.

Water for this Project may be obtained from the City of Bellevue. A hydrant permit will be required to be secured by the Contractor for any necessary water.

Water will be provided at the convenience of the City and shall be used sparingly and not wasted. The City reserves the right to control the location and use of water based on the City's own needs.

2-07.5 Payment
(May 5, 2016 G&O)

This Section is supplemented with the following:

All costs for all water permit(s), and furnishing and placing water shall be included in the unit contract and lump sum prices as listed in the Proposal. No additional or separate payment will be made for this work.

2-09 STRUCTURE EXCAVATION

2-09.3(1) General Requirements
(August 1, 2009 G&O)

This Section is supplemented with the following:

When any Work is being considered by the Contractor in the vicinity of an existing utility, the Contractor shall so inform an authority of the particular utility in ample time so that the utility involved and the Contractor may take any precautions necessary to facilitate construction in the vicinity of the utility, and thereby protect that particular utility from damage.

Protecting and Maintaining Utility Service

The Contractor shall protect and maintain the operational service of existing utility systems in a continuous manner as possible. The Contractor shall have the approval from the Engineer and notification shall be given to the Contracting Agency before any disruptions of service in existing utilities will be allowed. The Contractor shall comply with all the conditions established by the Engineer and the Contracting Agency. The Contractor shall give the utility owner a minimum notice of 48 hours before disrupting any planned service interruption. No planned interruption to an existing system shall be allowed on Fridays, weekends, or holidays, unless specifically agreed to in writing by the Contracting Agency. Where services are to be shut down, affected parties shall be notified in writing by the Contractor (i.e., door hangers) at least 48 hours and not more than 72 hours in advance of the time and period of shut down. The Contractor shall make every effort to keep shut down schedules to periods of anticipated minimum usage and for the least period of time.

Where the construction crosses or is adjacent to existing utilities, the Contractor shall exercise extreme care to protect such utilities from damage. Additionally, the Contractor shall review the Plans, the project site and familiarize himself with the various utilities and plan his

construction activities in recognition that the very close proximity of existing utilities to the proposed work will adversely affect production rates of installation of the various planned improvements. The Contractor is hereby advised and cautioned that the location of existing utilities will be cause for considerable and extreme care and due diligence on the part of the Contractor. As such, work production rates are anticipated to be significantly impacted by their presence and normal production rates should not be anticipated, during construction by the Contractor for work in these areas. The Contractor shall anticipate minor alignment adjustments will also be required to accommodate the installation of utilities.

2-09.3(1)E Backfilling
(February 17, 2009 G&O)

This Section is supplemented with the following:

Where existing and/or proposed ground contours prevent a minimum of 24 inches of cover above “flexible” storm pipe or where utility crossings necessitate, the Contracting Agency may direct the Contractor to install a controlled density fill encasement for the pipe. The encasement shall be constructed in accordance with the Plans and/or as directed in the field by the Contracting Agency. Material for encasement shall be controlled density fill per Section 2-09.3(1)E of the Standard Specifications. The pipe shall be securely held in place until the material has “set.” Trenches located within roadways/drives shall be protected with H-20 steel plates, or Contracting Agency-approved equal, while the material sets.

2-09.3(5) Locating Utilities (New Section)
(March 3, 2011 G&O)

A reasonable attempt has been made to locate known existing utilities; however, the exact location, and/or depth is unknown in most instances. It shall be the responsibility of the Contractor to locate existing utilities, to include their respective depths.

The Contractor shall provide field exploration through vacuum excavation, potholing or other suitable means to locate more precisely existing underground utilities as to location and depth. The Contractor shall decide on the difficulties to be encountered in constructing the project, and determine therefrom the extent of exploration required to expedite the construction to first prevent damage to those utilities, and secondly to determine if the new construction is to go around, over or under the existing utility. Where underground utilities are found to be in the way of construction, such condition shall not be deemed to be a changed or differing site condition, and if necessary, minor pipe alignment or grade will be

modified at no additional cost to the Contracting Agency. At a minimum, potholing will be required at all utility interties prior to trench excavation for connections and at all major utility crossings, and potential conflicts noted by underground location notification as may be directed by the Engineer. See Contract Plans for additional specific locations.

2-09.4 Measurement
(March 3, 2011 G&O)

This Section is supplemented with the following:

Measurement for controlled density fill will be per cubic yard, measured in place.

No specific unit of measurement shall apply to the lump sum item of locate existing utilities.

Measurement for pothole will be per each pothole location.

2-09.5 Payment
(March 3, 2011 G&O)

Delete all paragraphs under this Section and replace with the following:

"Controlled Density Fill," per cubic yard.

The unit contract price per cubic yard for "Controlled Density Fill" shall be full pay for furnishing all labor, tools, equipment, and materials to furnish and install the placement of the controlled density fill as indicated on the Plans and specified herein including, but not limited to, pipe encasements, pipe plugging or trench backfill.

"Locate Existing Utilities," per lump sum.

The lump sum contract price for "Locate Existing Utilities" shall be full compensation for all costs incurred by the Contractor in performing the work. This bid item shall be paid proportionate to the installation of all utilities, complete and in place.

"Pothole," per each.

The unit contract price per each for "Pothole" shall be full compensation for all costs incurred by the Contractor in excavating, vactoring, measuring, recording depth of cover, type of material, diameter of

pipe/conduit, recording station and offset of the pothole and submitting this information to the Contracting Agency, and backfilling pothole locations where shown on the Plans or directed by the Contracting Agency.

DIVISION 3

AGGREGATE PRODUCTION AND ACCEPTANCE

3-01 PRODUCTION FROM QUARRY AND PIT SITES

3-01.2 Material Sources, General Requirement

3-01.2(1) Approval of Source

(August 16, 2012 G&O)

This Section is supplemented with the following:

The Contractor is responsible for all costs associated with approval of the material source.

DIVISION 4

BASES

4-04 BALLAST AND CRUSHED SURFACING

4-04.4 Measurement

(March 17, 2016 G&O)

Delete the last sentence in this Section and replace with the following:

> No measurement will be made for water used in placing and compacting surfacing materials.

4-04.5 Payment

(March 17, 2016 G&O)

This Section is supplemented with the following:

> The unit contract prices for the various types of ballast, structural fill, crushed surfacing base course, and crushed surfacing top course materials shall include all costs for obtaining the materials, hauling the materials to the site, stockpiling, spreading, grading, shaping, moisture conditioning, compacting, and all other incidentals, complete, in place. Asphalt grindings are not subject to reimbursement under any of these bid items.

DIVISION 5

SURFACE TREATMENTS AND PAVEMENTS

5-04 HOT MIX ASPHALT

(March 21, 2018 G&O)

Delete this entire section with the exception of 5-04.2(1), and replace it with the following:

5-04.1 Description

This Work shall consist of providing and placing one or more layers of plant-mixed hot mix asphalt (HMA) on a prepared foundation or base in accordance with these Specifications and the lines, grades, thicknesses, and typical cross-sections shown in the Plans. The manufacture of HMA may include warm mix asphalt (WMA) processes in accordance with these Specifications. WMA processes include organic additives, chemical additives, and foaming.

This work also consists of adjusting castings to grade, furnishing and installing temporary HMA per the details in the Contract Plans.

HMA shall be composed of asphalt binder and mineral materials as may be required, mixed in the proportions specified to provide a homogeneous, stable, and workable mixture.

5-04.2 Materials

Materials shall meet the requirements of the following sections:

Asphalt Binder	9-02.1(4)
Cationic Emulsified Asphalt	9-02.1(6)
Anti-Stripping Additive	9-02.4
HMA Additive	9-02.5
Aggregates	9-03.8
Recycled Asphalt Pavement	9-03.8(3)B
Mineral Filler	9-03.8(5)
Recycled Material	9-03.21
Portland Cement	9-01
Sand	9-03.1(2).
(As noted in 5-04.3(5)C for crack sealing)	
Joint Sealant	9-04.2
Foam Backer Rod	9-04.2(3)A

The Contract documents may establish that the various mineral materials required for the manufacture of HMA will be furnished in whole or in part by the Contracting Agency. If the documents do not establish the furnishing of

any of these mineral materials by the Contracting Agency, the Contractor shall be required to furnish such materials in the amounts required for the designated mix. Mineral materials include coarse and fine aggregates, and mineral filler.

The Contractor may choose to utilize recycled asphalt pavement (RAP) in the production of HMA. The RAP may be from pavements removed under the Contract, if any, or pavement material from an existing stockpile.

The Contractor may use up to 20 percent RAP by total weight of HMA with no additional sampling or testing of the RAP. The RAP shall be sampled and tested at a frequency of one sample for every 1,000 tons produced and not less than ten samples per project. The asphalt content and gradation test data shall be reported to the Contracting Agency when submitting the mix design for approval on the QPL. The Contractor shall include the RAP as part of the mix design as defined in these Specifications.

The grade of asphalt binder shall be as required by the Contract. Blending of asphalt binder from different sources is not permitted.

The Contractor may only use warm mix asphalt (WMA) processes in the production of HMA with 20 percent or less RAP by total weight of HMA. The Contractor shall submit to the Engineer for approval the process that is proposed and how it will be used in the manufacture of HMA.

Production of aggregates shall comply with the requirements of Section 3-01.

Preparation of stockpile site, the stockpiling of aggregates, and the removal of aggregates from stockpiles shall comply with the requirements of Section 3-02.

5-04.2(2) Mix Design – Obtaining Project Approval

ESALs

The number of ESALs for the design and acceptance of the HMA shall be 0.3 to <3 million.

Commercial HMA shall be an HMA Cl. 1/2" PG 58H-22 design mix.

No paving shall begin prior to the approval of the mix design by the Engineer.

Nonstatistical evaluation will be used for all HMA not designated as Commercial HMA in the contract documents.

Commercial evaluation will be used for Commercial HMA and for other classes of HMA in the following applications: sidewalks, road approaches, ditches, slopes, paths, trails, gores, prelevel, and pavement repair. Other nonstructural applications of HMA accepted by commercial evaluation shall be as approved by the Project Engineer. Sampling and testing of HMA accepted by commercial evaluation will be at the option of the Project Engineer. The Proposal quantity of HMA that is accepted by commercial evaluation will be excluded from the quantities used in the determination of nonstatistical evaluation.

Nonstatistical Mix Design. Fifteen days prior to the first day of paving the contractor shall provide one of the following mix design verification certifications for Contracting Agency review:

- The WSDOT Mix Design Evaluation Report from the current WSDOT QPL, or one of the mix design verification certifications listed below.

- The proposed HMA mix design on WSDOT Form 350-042 with the seal and certification (stamp & signature) of a valid licensed Washington State Professional Engineer.

- The Mix Design Report for the proposed HMA mix design developed by a qualified City or County laboratory that is within one year of the approval date.**

The mix design shall be performed by a lab accredited by a national authority such as Laboratory Accreditation Bureau, L-A-B for Construction Materials Testing, The Construction Materials Engineering Council (CMEC's) ISO 17025 or AASHTO Accreditation Program (AAP) and shall supply evidence of participation in the AASHTO: resource proficiency sample program.

Mix designs for HMA accepted by Nonstatistical evaluation shall:

- Have the aggregate structure and asphalt binder content determined in accordance with WSDOT Standard Operating Procedure 732 and meet the requirements of Sections 9-03.8(2), except that Hamburg testing for ruts and stripping are at the discretion of the Engineer, and 9-03.8(6).

- Have anti-strip requirements, if any, for the proposed mix design determined in accordance with AASHTO T 283 or T 324, or based on historic anti-strip and aggregate source compatibility from previous WSDOT lab testing.

At the discretion of the Engineer, agencies may accept verified mix designs older than 12 months from the original verification date with a certification from the Contractor that the materials and sources are the same as those shown on the original mix design.

Commercial Evaluation Approval of a mix design for "Commercial Evaluation" will be based on a review of the Contractor's submittal of WSDOT Form 350-042 (For commercial mixes, AASHTO T 324 evaluation is not required) or a Mix Design from the current WSDOT QPL or from one of the processes allowed by this section. Testing of the HMA by the Contracting Agency for mix design approval is not required.

5-04.2(2)B Using Warm Mix Asphalt Processes

The Contractor may elect to use additives that reduce the optimum mixing temperature or serve as a compaction aid for producing HMA. Additives include organic additives, chemical additives and foaming processes. The use of Additives is subject to the following:

- Do not use additives that reduce the mixing temperature more than allowed in Section 5-04.3(6) in the production of mixtures.

- Before using additives, obtain the Engineer's approval using WSDOT Form 350-076 to describe the proposed additive and process.

5-04.3 Construction Requirements

5-04.3(1) Weather Limitations

Do not place HMA for wearing course on any Traveled Way beginning October 1st through March 31st of the following year without written concurrence from the Engineer.

Do not place HMA on any wet surface, or when the average surface temperatures are less than those specified below, or when weather conditions otherwise prevent the proper handling or finishing of the HMA.

Minimum Surface Temperature for Paving

Compacted Thickness (Feet)	Wearing Course	Other Courses
Less than 0.10	55 degrees F	45 degrees F
0.10 to .20	45 degrees F	35 degrees F
More than 0.20	35 degrees F	35 degrees F

5-04.3(2) Paving Under Traffic

When the Roadway being paved is open to traffic, the requirements of this Section shall apply.

The Contractor shall keep intersections open to traffic at all times except when paving the intersection or paving across the intersection. During such time, and provided that there has been an advance warning to the public, the intersection may be closed for the minimum time required to place and compact the mixture. In hot weather, the Engineer may require the application of water to the pavement to accelerate the finish rolling of the pavement and to shorten the time required before reopening to traffic.

Before closing an intersection, advance warning signs shall be placed and signs shall also be placed marking the detour or alternate route.

During paving operations, temporary pavement markings shall be maintained throughout the project. Temporary pavement markings shall be installed on the Roadway prior to opening to traffic. Temporary pavement markings shall be in accordance with Section 8-23.

All costs in connection with performing the Work in accordance with these requirements, except the cost of temporary pavement markings, shall be included in the unit Contract prices for the various Bid items involved in the Contract.

5-04.3(3) Equipment

5-04.3(3)A Mixing Plant

Plants used for the preparation of HMA shall conform to the following requirements:

1. **Equipment for Preparation of Asphalt Binder** – Tanks for the storage of asphalt binder shall be equipped to heat and hold the material at the required temperatures. The heating shall be

accomplished by steam coils, electricity, or other approved means so that no flame shall be in contact with the storage tank. The circulating system for the asphalt binder shall be designed to ensure proper and continuous circulation during the operating period. A valve for the purpose of sampling the asphalt binder shall be placed in either the storage tank or in the supply line to the mixer.

2. **Thermometric Equipment** – An armored thermometer, capable of detecting temperature ranges expected in the HMA mix, shall be fixed in the asphalt binder feed line at a location near the charging valve at the mixer unit. The thermometer location shall be convenient and safe for access by Inspectors. The plant shall also be equipped with an approved dial-scale thermometer, a mercury actuated thermometer, an electric pyrometer, or another approved thermometric instrument placed at the discharge chute of the drier to automatically register or indicate the temperature of the heated aggregates. This device shall be in full view of the plant operator.

3. **Heating of Asphalt Binder** – The temperature of the asphalt binder shall not exceed the maximum recommended by the asphalt binder manufacturer nor shall it be below the minimum temperature required to maintain the asphalt binder in a homogeneous state. The asphalt binder shall be heated in a manner that will avoid local variations in heating. The heating method shall provide a continuous supply of asphalt binder to the mixer at a uniform average temperature with no individual variations exceeding 25 degrees F. Also, when a WMA additive is included in the asphalt binder, the temperature of the asphalt binder shall not exceed the maximum recommended by the manufacturer of the WMA additive.

4. **Sampling and Testing of Mineral Materials** – The HMA plant shall be equipped with a mechanical sampler for the sampling of the mineral materials. The mechanical sampler shall meet the requirements of Section 1-05.6 for the crushing and screening operation. The Contractor shall provide for the setup and operation of the field testing facilities of the Contracting Agency as provided for in Section 3-01.2(2).

5. **Sampling HMA** – The HMA plant shall provide for sampling HMA by one of the following methods:

   a. A mechanical sampling device attached to the HMA plant.

b. Platforms or devices to enable sampling from the hauling vehicle without entering the hauling vehicle.

5-04.3(3)B Hauling Equipment

Trucks used for hauling HMA shall have tight, clean, smooth metal beds and shall have a cover of canvas or other suitable material of sufficient size to protect the mixture from adverse weather. Whenever the weather conditions during the work shift include, or are forecast to include, precipitation or an air temperature less than 45 degrees F or when time from loading to unloading exceeds 30 minutes, the cover shall be securely attached to protect the HMA.

The Contractor shall provide an environmentally benign means to prevent the HMA mixture from adhering to the hauling equipment. Excess release agent shall be drained prior to filling hauling equipment with HMA. Petroleum derivatives or other coating material that contaminate or alter the characteristics of the HMA shall not be used. For live bed trucks, the conveyer shall be in operation during the process of applying the release agent.

5-04.3(3)C Pavers

HMA pavers shall be self-contained, power-propelled units, provided with an internally heated vibratory screed and shall be capable of spreading and finishing courses of HMA plant mix material in lane widths required by the paving section shown in the Plans.

The HMA paver shall be in good condition and shall have the most current equipment available from the manufacturer for the prevention of segregation of the HMA mixture installed, in good condition, and in working order. The equipment certification shall list the make, model, and year of the paver and any equipment that has been retrofitted.

The screed shall be operated in accordance with the manufacturer's recommendations and shall effectively produce a finished surface of the required evenness and texture without tearing, shoving, segregating, or gouging the mixture. A copy of the manufacturer's recommendations shall be provided upon request by the Contracting Agency. Extensions will be allowed provided they produce the same results, including ride, density, and surface texture as obtained by the primary screed. Extensions without augers and an internally heated vibratory screed shall not be used in the Traveled Way.

When specified in the Contract, reference lines for vertical control will be required. Lines shall be placed on both outer edges of the Traveled Way of each Roadway. Horizontal control utilizing the reference line will be permitted. The grade and slope for intermediate lanes shall be controlled automatically from reference lines or by means of a mat referencing device and a slope control device. When the finish of the grade prepared for paving is superior to the established tolerances and when, in the opinion of the Engineer, further improvement to the line, grade, cross-section, and smoothness can best be achieved without the use of the reference line, a mat referencing device may be substituted for the reference line. Substitution of the device will be subject to the continued approval of the Engineer. A joint matcher may be used subject to the approval of the Engineer. The reference line may be removed after the completion of the first course of HMA when approved by the Engineer. Whenever the Engineer determines that any of these methods are failing to provide the necessary vertical control, the reference lines will be reinstalled by the Contractor.

The Contractor shall furnish and install all pins, brackets, tensioning devices, wire, and accessories necessary for satisfactory operation of the automatic control equipment.

If the paving machine in use is not providing the required finish, the Engineer may suspend Work as allowed by Section 1-08.6. Any cleaning or solvent type liquids spilled on the pavement shall be thoroughly removed before paving proceeds.

5-04.3(3)D Material Transfer Device or Material Transfer Vehicle

A Material Transfer Device/Vehicle (MTD/V) shall only be used with the Engineer's approval, unless otherwise required by the contract.

Where an MTD/V is required by the contract, the Engineer may approve paving without an MTD/V, at the request of the Contractor. The Engineer will determine if an equitable adjustment in cost or time is due.

When used, the MTD/V shall mix the HMA after delivery by the hauling equipment and prior to laydown by the paving machine. Mixing of the HMA shall be sufficient to obtain a uniform temperature throughout the mixture. If a windrow elevator is used, the length of the windrow may be limited in urban areas or through intersections, at the discretion of the Engineer.

To be approved for use, an MTV:

1. Shall be self-propelled vehicle, separate from the hauling vehicle or paver.

2. Shall not be connected to the hauling vehicle or paver.

3. May accept HMA directly from the haul vehicle or pick up HMA from a windrow.

4. Shall mix the HMA after delivery by the hauling equipment and prior to placement into the paving machine.

5. Shall mix the HMA sufficiently to obtain a uniform temperature throughout the mixture.

To be approved for use, an MTD:

1. Shall be positively connected to the paver.

2. May accept HMA directly from the haul vehicle or pick up HMA from a windrow.

3. Shall mix the HMA after delivery by the hauling equipment and prior to placement into the paving machine.

4. Shall mix the HMA sufficiently to obtain a uniform temperature throughout the mixture.

5-04.3(3)E Rollers

Rollers shall be of the steel wheel, vibratory, oscillatory, or pneumatic tire type, in good condition and capable of reversing without backlash. Operation of the roller shall be in accordance with the manufacturer's recommendations. When ordered by the Engineer for any roller planned for use on the project, the Contractor shall provide a copy of the manufacturer's recommendation for the use of that roller for compaction of HMA. The number and weight of rollers shall be sufficient to compact the mixture in compliance with the requirements of Section 5-04.3(10). The use of equipment that results in crushing of the aggregate will not be permitted. Rollers producing pickup, washboard, uneven compaction of the surface, displacement of the mixture or other undesirable results shall not be used.

5-04.3(4) Preparation of Existing Paved Surfaces

When the surface of the existing pavement or old base is irregular, the Contractor shall bring it to a uniform grade and cross-section as shown on the Plans or approved by the Engineer.

Preleveling of uneven or broken surfaces over which HMA is to be placed may be accomplished by using an asphalt paver, a motor patrol grader, or by hand raking, as approved by the Engineer.

Compaction of preleveling HMA shall be to the satisfaction of the Engineer and may require the use of small steel wheel rollers, plate compactors, or pneumatic rollers to avoid bridging across preleveled areas by the compaction equipment. Equipment used for the compaction of preleveling HMA shall be approved by the Engineer.

Before construction of HMA on an existing paved surface, the entire surface of the pavement shall be clean. All fatty asphalt patches, grease drippings, and other objectionable matter shall be entirely removed from the existing pavement. All pavements or bituminous surfaces shall be thoroughly cleaned of dust, soil, pavement grindings, and other foreign matter. All holes and small depressions shall be filled with an appropriate class of HMA. The surface of the patched area shall be leveled and compacted thoroughly. Prior to the application of tack coat, or paving, the condition of the surface shall be approved by the Engineer.

A tack coat of asphalt shall be applied to all paved surfaces on which any course of HMA is to be placed or abutted. Tack coat shall be uniformly applied to cover the existing pavement with a thin film of residual asphalt free of streaks and bare spots at a rate between 0.02 and 0.10 gallons per square yard of retained asphalt. The rate of application shall be approved by the Engineer. A heavy application of tack coat shall be applied to all joints. For Roadways open to traffic, the application of tack coat shall be limited to surfaces that will be paved during the same working shift. The spreading equipment shall be equipped with a thermometer to indicate the temperature of the tack coat material.

Equipment shall not operate on tacked surfaces until the tack has broken and cured. If the Contractor's operation damages the tack coat it shall be repaired prior to placement of the HMA.

The tack coat shall be CSS-1, or CSS-1h emulsified asphalt. The CSS-1 and CSS-1h emulsified asphalt may be diluted once with water at a rate not to exceed one part water to one part emulsified asphalt. The tack coat shall

have sufficient temperature such that it may be applied uniformly at the specified rate of application and shall not exceed the maximum temperature recommended by the emulsified asphalt manufacturer.

5-04.3(4)D Temporary HMA

During the course of construction, it may be necessary to provide improved temporary vehicle and/or pedestrian access within the project limits. Such temporary access shall be provided by temporarily patching trench crossings or other areas with temporary HMA, until such time as the permanent surface restoration is installed. Locations shall include those areas specifically indicated on the Plans, directed by the Engineer or as further specified herein. This material will be furnished, placed, compacted, and removed and wastehauled at various locations throughout the project. The trenches and/or subgrade shall be thoroughly compacted and brought to a smooth grade prior to placing the material. It shall be placed, maintained (daily), and removed and wastehauled by the Contractor. Typical compacted depth will be 4 inches.

5-04.3(5) Producing/Stockpiling Aggregates and RAP

Aggregates and RAP shall be stockpiled according to the requirements of Section 3-02. Sufficient storage space shall be provided for each size of aggregate and RAP. Materials shall be removed from stockpile(s) in a manner to ensure minimal segregation when being moved to the HMA plant for processing into the final mixture. Different aggregate sizes shall be kept separated until they have been delivered to the HMA plant.

5-04.3(5)A Vacant

5-04.3(6) Mixing

After the required amount of mineral materials, asphalt binder, recycling agent and anti-stripping additives have been introduced into the mixer the HMA shall be mixed until complete and uniform coating of the particles and thorough distribution of the asphalt binder throughout the mineral materials is ensured.

When discharged, the temperature of the HMA shall not exceed the optimum mixing temperature by more than 25 degrees F as shown on the reference mix design report or as approved by the Engineer. Also, when a WMA additive is included in the manufacture of HMA, the discharge temperature of the HMA shall not exceed the maximum recommended by the manufacturer of the WMA additive. A maximum water content of

2 percent in the mix, at discharge, will be allowed providing the water causes no problems with handling, stripping, or flushing. If the water in the HMA causes any of these problems, the moisture content shall be reduced as directed by the Engineer.

Storing or holding of the HMA in approved storage facilities will be permitted with approval of the Engineer, but in no event shall the HMA be held for more than 24 hours. HMA held for more than 24 hours after mixing shall be rejected. Rejected HMA shall be disposed of by the Contractor at no expense to the Contracting Agency. The storage facility shall have an accessible device located at the top of the cone or about the third point. The device shall indicate the amount of material in storage. No HMA shall be accepted from the storage facility when the HMA in storage is below the top of the cone of the storage facility, except as the storage facility is being emptied at the end of the working shift.

Recycled asphalt pavement (RAP) utilized in the production of HMA shall be sized prior to entering the mixer so that a uniform and thoroughly mixed HMA is produced. If there is evidence of the recycled asphalt pavement not breaking down during the heating and mixing of the HMA, the Contractor shall immediately suspend the use of the RAP until changes have been approved by the Engineer. After the required amount of mineral materials, RAP, new asphalt binder and asphalt rejuvenator have been introduced into the mixer the HMA shall be mixed until complete and uniform coating of the particles and thorough distribution of the asphalt binder throughout the mineral materials, and RAP is ensured.

5-04.3(7) Spreading and Finishing

The mixture shall be laid upon an approved surface, spread, and struck off to the grade and elevation established. HMA pavers complying with Section 5-04.3(3) shall be used to distribute the mixture. Unless otherwise directed by the Engineer, the nominal compacted depth of any layer of any course shall not exceed the following:

HMA Class 1"	0.35 feet
HMA Class 3/4" and HMA Class 1/2" wearing course	0.30 feet
other courses	0.35 feet
HMA Class 3/8"	0.15 feet

On areas where irregularities or unavoidable obstacles make the use of mechanical spreading and finishing equipment impractical, the paving may be done with other equipment or by hand.

When more than one job mix formula (JMF) is being utilized to produce HMA, the material produced for each JMF shall be placed by separate spreading and compacting equipment. The intermingling of HMA produced from more than one JMF is prohibited. Each strip of HMA placed during a work shift shall conform to a single JMF established for the class of HMA specified unless there is a need to make an adjustment in the JMF.

5-04.3(8) Aggregate Acceptance Prior to Incorporation in HMA

For HMA accepted by nonstatistical evaluation the aggregate properties of sand equivalent, uncompacted void content and fracture will be evaluated in accordance with Section 3-04. Sampling and testing of aggregates for HMA accepted by commercial evaluation will be at the option of the Engineer.

5-04.3(9) HMA Mixture Acceptance

Acceptance of HMA shall be as provided under nonstatistical, or commercial evaluation.

Nonstatistical evaluation will be used for the acceptance of HMA unless Commercial Evaluation is specified.

Commercial evaluation will be used for Commercial HMA and for other classes of HMA in the following applications: sidewalks, road approaches, ditches, slopes, paths, trails, gores, prelevel, temporary pavement, and pavement repair. Other nonstructural applications of HMA accepted by commercial evaluation shall be as approved by the Engineer. Sampling and testing of HMA accepted by commercial evaluation will be at the option of the Engineer.

The mix design will be the initial JMF for the class of HMA. The Contractor may request a change in the JMF. Any adjustments to the JMF will require the approval of the Engineer and may be made in accordance with this section.

HMA Tolerances and Adjustments

1. **Job Mix Formula Tolerances** – The constituents of the mixture at the time of acceptance shall conform to the following tolerances:

Aggregate Percent Passing	Non-Statistical Evaluation	Commercial Evaluation
1", 3/4", 1/2", and 3/8" sieves	+/- 6%	+/- 8%
No. 4 sieve	+/-6%	+/- 8%
No. 8 Sieve	+/- 6%	+/-8%
No. 200 sieve	+/- 2.0%	+/- 3.0%
Asphalt Binder	+/- 0.5%	+/- 0.7%
Air Voids, Va	2.5% min. and 5.5% max	N/A

These tolerance limits constitute the allowable limits as described in Section 1-06.2. The tolerance limit for aggregate shall not exceed the limits of the control points, except the tolerance limits for sieves designated as 100 percent passing will be 99-100.

1. **Job Mix Formula Adjustments** – An adjustment to the aggregate gradation or asphalt binder content of the JMF requires approval of the Engineer. Adjustments to the JMF will only be considered if the change produces material of equal or better quality and may require the development of a new mix design if the adjustment exceeds the amounts listed below.

   a. **Aggregates** – 2 percent for the aggregate passing the 1-1/2", 1", 3/4", 1/2", 3/8", and the No. 4 sieves, 1 percent for aggregate passing the No. 8 sieve, and 0.5 percent for the aggregate passing the No. 200 sieve. The adjusted JMF shall be within the range of the control points in Section 9-03.8(6).

   b. **Asphalt Binder Content** – The Engineer may order or approve changes to asphalt binder content. The maximum adjustment from the approved mix design for the asphalt binder content shall be 0.3 percent

5-04.3(9)A Vacant

5-04.3(9)B Vacant

5-04.3(9)C Mixture Acceptance – Nonstatistical Evaluation

HMA mixture which is accepted by Nonstatistical Evaluation will be evaluated by the Contracting Agency by dividing the HMA tonnage into lots.

The Engineer will furnish the Contractor with a copy of the results of all acceptance testing performed in the field. The Engineer will provide the Composite Pay Factor (CPF) of the completed sublots after three sublots have been tested. Sublot sample test results (gradation and asphalt binder content) may be challenged by the Contractor.

5-04.3(9)C1 Mixture Nonstatistical Evaluation – Lots and Sublots

A lot is represented by randomly selected samples of the same mix design that will be tested for acceptance. A lot is defined as the total quantity of material or work produced for each JMF placed. Only one lot per JMF is expected. A sublot shall be equal to one day's production or 800 tons, whichever is less except that the final sublot will be a minimum of 400 tons and may be increased to 1,200 tons.

All of the test results obtained from the acceptance samples from a given lot shall be evaluated collectively. If the Contractor requests a change to the JMF that is approved, the material produced after the change will be evaluated on the basis of the new JMF for the remaining sublots in the current lot and for acceptance of subsequent lots. For a lot in progress with a CPF less than 0.75, a new lot will begin at the Contractor's request after the Engineer is satisfied that material conforming to the Specifications can be produced.

Sampling and testing for evaluation shall be performed on the frequency of one sample per sublot.

5-04.3(9)C2 Mixture Nonstatistical Evaluation Sampling

Samples for acceptance testing shall be obtained by the Contractor when ordered by the Engineer. The Contractor shall sample the HMA mixture in the presence of the Engineer and in accordance with AASHTO T 168. A minimum of three samples should be taken for each class of HMA placed on a project. If used in a structural application, at least one of the three samples shall to be tested.

Sampling and testing HMA in a Structural application where quantities are less than 400 tons is at the discretion of the Engineer.

For HMA used in a structural application and with a total project quantity less than 800 tons but more than 400 tons, a minimum of one acceptance test shall be performed. In all cases, a minimum of 3 samples will be obtained at the point of acceptance, a minimum of one of the three samples will be tested for conformance to the JMF:

- If the test results are found to be within specification requirements, additional testing will be at the Engineer's discretion.

- If test results are found not to be within specification requirements, additional testing of the remaining samples to determine a Composite Pay Factor (CPF) shall be performed.

5-04.3(9)C3 Mixture Nonstatistical Evaluation – Acceptance Testing

Testing of HMA for compliance of Va will at the option of the Contracting Agency. If tested, compliance of Va will use WSDOT SOP 731.

Testing for compliance of asphalt binder content will be by WSDOT FOP for AASHTO T 308.

Testing for compliance of gradation will be by FOP for WAQTC T 27/T 11.

The Engineer will furnish the Contractor with a copy of the results of all acceptance testing performed in the field.

5-04.3(9)C4 Mixture Nonstatistical Evaluation – Pay Factors

For each lot of material falling outside the tolerance limits in 5-04.3(9), the Contracting Agency will determine a Composite Pay Factor (CPF) using the following price adjustment factors:

Table of Price Adjustment Factors	
Constituent	**Factor "f"**
All aggregate passing: 1-1/2", 1", 3/4", 1/2", 3/8" and No. 4 sieves	2
All aggregate passing No. 8 sieve	15
All aggregate passing No. 200 sieve	20
Asphalt binder	40
Air Voids (Va) (where applicable)	20

Each lot of HMA produced under Nonstatistical Evaluation and having all constituents falling within the tolerance limits of the job mix formula shall be accepted at the unit Contract price with no further evaluation. When one or

more constituents fall outside the nonstatistical tolerance limits in the Job Mix Formula shown in Table of Price Adjustment Factors, the lot shall be evaluated in accordance with Section 1-06.2 to determine the appropriate CPF. The nonstatistical tolerance limits will be used in the calculation of the CPF and the maximum CPF shall be 1.00. When less than three sublots exist, backup samples of the existing sublots or samples from the Roadway shall be tested to provide a minimum of three sets of results for evaluation.

5-04.3(9)C5 Vacant

5-04.3(9)C6 Mixture Nonstatistical Evaluation – Price Adjustments

For each lot of HMA mix produced under Nonstatistical Evaluation when the calculated CPF is less than 1.00, a Nonconforming Mix Factor (NCMF) will be determined. The NCMF equals the algebraic difference of CPF minus 1.00 multiplied by 60 percent. The total job mix compliance price adjustment will be calculated as the product of the NCMF, the quantity of HMA in the lot in tons, and the unit Contract price per ton of mix.

If a constituent is not measured in accordance with these Specifications, its individual pay factor will be considered 1.00 in calculating the Composite Pay Factor (CPF).

5-04.3(9)C7 Mixture Nonstatistical Evaluation – Retests

The Contractor may request a sublot be retested. To request a retest, the Contractor shall submit a written request within 7 calendar days after the specific test results have been received. A split of the original acceptance sample will be retested. The split of the sample will not be tested with the same tester that ran the original acceptance test. The sample will be tested for a complete gradation analysis, asphalt binder content, and, at the option of the agency, Va. The results of the retest will be used for the acceptance of the HMA in place of the original sublot sample test results. The cost of testing will be deducted from any monies due or that may come due the Contractor under the Contract at the rate of $500 per sample.

5-04.3 (9)D Mixture Acceptance – Commercial Evaluation

If sampled and tested, HMA produced under Commercial Evaluation and having all constituents falling within the tolerance limits of the job mix formula shall be accepted at the unit Contract price with no further evaluation. When one or more constituents fall outside the commercial tolerance limits in the Job Mix Formula shown in 5-04.3(9), the lot shall be evaluated in accordance with Section 1-06.2 to determine the appropriate

CPF. The commercial tolerance limits will be used in the calculation of the CPF and the maximum CPF shall be 1.00. When less than three sublots exist, backup samples of the existing sublots or samples from the street shall be tested to provide a minimum of three sets of results for evaluation.

For each lot of HMA mix produced and tested under Commercial Evaluation when the calculated CPF is less than 1.00, a Nonconforming Mix Factor (NCMF) will be determined. The NCMF equals the algebraic difference of CPF minus 1.00 multiplied by 60 percent. The Job Mix Compliance Price Adjustment will be calculated as the product of the NCMF, the quantity of HMA in the lot in tons, and the unit Contract price per ton of mix.

If a constituent is not measured in accordance with these Specifications, its individual pay factor will be considered 1.00 in calculating the Composite Pay Factor (CPF).

5-04.3(10) HMA Compaction Acceptance

HMA mixture accepted by nonstatistical evaluation that is used in traffic lanes, including lanes for intersections, ramps, truck climbing, weaving, and speed change, and having a specified compacted course thickness greater than 0.10-foot, shall be compacted to a specified level of relative density. The specified level of relative density shall be a Composite Pay Factor (CPF) of not less than 0.75 when evaluated in accordance with Section 1-06.2, using a minimum of 92 percent of the maximum density. The maximum density shall be determined by WSDOT FOP for AASHTO T 729. The specified level of density attained will be determined by the evaluation of the density of the pavement. The density of the pavement shall be determined in accordance with WSDOT FOP for WAQTC TM 8, except that gauge correlation will be at the discretion of the Engineer, when using the nuclear density gauge and WSDOT SOP 736 when using cores to determine density.

Tests for the determination of the pavement density will be taken in accordance with the required procedures for measurement by a nuclear density gauge or roadway cores after completion of the finish rolling.
If the Contracting Agency uses a nuclear density gauge to determine density the test procedures FOP for WAQTC TM 8 and WSDOT SOP T 729 will be used on the day the mix is placed and prior to opening to traffic.

Roadway cores for density may be obtained by either the Contracting Agency or the Contractor in accordance with WSDOT SOP 734. The core diameter shall be 4-inches minimum, unless otherwise approved by the

Engineer. Roadway cores will be tested by the Contracting Agency in accordance with WSDOT FOP for AASHTO T 166.

If the Contract includes the Bid item “Roadway Core” the cores shall be obtained by the Contractor in the presence of the Engineer on the same day the mix is placed and at locations designated by the Engineer. If the Contract does not include the Bid item “Roadway Core” the Contracting Agency will obtain the cores.

For a lot in progress with a CPF less than 0.75, a new lot will begin at the Contractor’s request after the Engineer is satisfied that material conforming to the Specifications can be produced.

A lot is represented by randomly selected samples of the same mix design that will be tested for acceptance. A lot is defined as the total quantity of material or work produced for each Job Mix Formula placed. Only one lot per JMF is expected. A sublot shall be equal to one day’s production or 400 tons, whichever is less except that the final sublot will be a minimum of 200 tons and may be increased to 800 tons. Testing for compaction will be at the rate of 5 tests per sublot per WSDOT T 738.

HMA mixture accepted by commercial evaluation and HMA constructed under conditions other than those listed above shall be compacted on the basis of a test point evaluation of the compaction train. The test point evaluation shall be performed in accordance with instructions from the Engineer. The number of passes with an approved compaction train, required to attain the maximum test point density, shall be used on all subsequent paving.

HMA for preleveling shall be thoroughly compacted. HMA that is used for preleveling wheel rutting shall be compacted with a pneumatic tire roller unless otherwise approved by the Engineer.

Test Results

For a sublot that has been tested with a nuclear density gauge that did not meet the minimum of 92 percent of the reference maximum density in a compaction lot with a CPF below 1.00 and thus subject to a price reduction or rejection, the Contractor may request that a core be used for determination of the relative density of the sublot. The relative density of the core will replace the relative density determined by the nuclear density gauge for the sublot and will be used for calculation of the CPF and acceptance of HMA compaction lot.

When cores are taken by the Contracting Agency at the request of the Contractor, they shall be requested by noon of the next workday after the test results for the sublot have been provided or made available to the Contractor. Core locations shall be outside of wheel paths and as determined by the Engineer. Traffic control shall be provided by the Contractor as requested by the Engineer. Failure by the Contractor to provide the requested traffic control will result in forfeiture of the request for cores. When the CPF for the lot based on the results of the HMA cores is less than 1.00, the cost for the coring will be deducted from any monies due or that may become due the Contractor under the Contract at the rate of $200 per core and the Contractor shall pay for the cost of the traffic control.

5-04.3(10)A HMA Compaction – General Compaction Requirements

Compaction shall take place when the mixture is in the proper condition so that no undue displacement, cracking, or shoving occurs. Areas inaccessible to large compaction equipment shall be compacted by other mechanical means. Any HMA that becomes loose, broken, contaminated, shows an excess or deficiency of asphalt, or is in any way defective, shall be removed and replaced with new hot mix that shall be immediately compacted to conform to the surrounding area.

The type of rollers to be used and their relative position in the compaction sequence shall generally be the Contractor's option, provided the specified densities are attained. Unless the Engineer has approved otherwise, rollers shall only be operated in the static mode when the internal temperature of the mix is less than 175 degrees F. Regardless of mix temperature, a roller shall not be operated in a mode that results in checking or cracking of the mat. Rollers shall only be operated in static mode on bridge decks.

5-04.3(10)B HMA Compaction – Cyclic Density

Low cyclic density areas are defined as spots or streaks in the pavement that are less than 90 percent of the theoretical maximum density. At the Engineer's discretion, the Engineer may evaluate the HMA pavement for low cyclic density, and when doing so will follow WSDOT SOP 733. A $500 Cyclic Density Price Adjustment will be assessed for any 500-foot section with two or more density readings below 90 percent of the theoretical maximum density.

5-04.3(10)C Vacant

5-04.3(10)D HMA Nonstatistical Compaction

5-04.3(10)D1 HMA Nonstatistical Compaction – Lots and Sublots

HMA compaction which is accepted by nonstatistical evaluation will be based on acceptance testing performed by the Contracting Agency dividing the project into compaction lots.

A lot is represented by randomly selected samples of the same mix design that will be tested for acceptance, with a maximum of 15 sublots per lot; the final lot for a mix design may be increased to 25 sublots. Sublots will be uniform in size with a maximum sublot size based on original Plan quantity tons of HMA as specified in the table below. The sublot locations within each density lot will be determined by the Engineer. For a lot in progress with a CPF less than 0.75, a new lot will begin at the Contractor's request after the Engineer is satisfied that material conforming to the Specifications can be produced.

HMA Original Plan Quantity (tons)	Sublot Size (tons)
<20,000	100
20,000 to 30,000	150
>30,000	200

HMA mixture accepted by commercial evaluation and HMA constructed under conditions other than those listed above shall be compacted on the basis of a test point evaluation of the compaction train. The test point evaluation shall be performed in accordance with instructions from the Engineer. The number of passes with an approved compaction train, required to attain the maximum test point density, shall be used on all subsequent paving.

HMA for preleveling shall be thoroughly compacted. HMA that is used to prelevel wheel ruts shall be compacted with a pneumatic tire roller unless otherwise approved by the Engineer.

5-04.3(10)D2 HMA Compaction Nonstatistical Evaluation – Acceptance Testing

The location of the HMA compaction acceptance tests will be randomly selected by the Engineer from within each sublot, with one test per sublot.

5-04.3(10)D3 HMA Nonstatistical Compaction – Price Adjustments

For each compaction lot with one or two sublots, having all sublots attain a relative density that is 92 percent of the reference maximum density the HMA shall be accepted at the unit Contract price with no further evaluation. When a sublot does not attain a relative density that is 92 percent of the reference maximum density, the lot shall be evaluated in accordance with Section 1-06.2 to determine the appropriate CPF. The maximum CPF shall be 1.00, however, lots with a calculated CPF in excess of 1.00 will be used to offset lots with CPF values below 1.00 but greater than 0.90. Lots with CPF lower than 0.90 will be evaluated for compliance per 5-04.3(11). Additional testing by either a nuclear moisture-density gauge or cores will be completed as required to provide a minimum of three tests for evaluation.

For compaction below the required 92% a Non-Conforming Compaction Factor (NCCF) will be determined. The NCCF equals the algebraic difference of CPF minus 1.00 multiplied by 40 percent. The Compaction Price Adjustment will be calculated as the product of CPF, the quantity of HMA in the compaction control lot in tons, and the unit Contract price per ton of mix.

5-04.3(11) Reject Work

5-04.3(11)A Reject Work General

Work that is defective or does not conform to Contract requirements shall be rejected. The Contractor may propose, in writing, alternatives to removal and replacement of rejected material. Acceptability of such alternative proposals will be determined at the sole discretion of the Engineer. HMA that has been rejected is subject to the requirements in Section 1-06.2(2) and this specification, and the Contractor shall submit a corrective action proposal to the Engineer for approval.

5-04.3(11)B Rejection by Contractor

The Contractor may, prior to sampling, elect to remove any defective material and replace it with new material. Any such new material will be sampled, tested, and evaluated for acceptance.

5-04.3(11)C Rejection Without Testing (Mixture or Compaction)

The Engineer may, without sampling, reject any batch, load, or section of Roadway that appears defective. Material rejected before placement shall not be incorporated into the pavement. Any rejected section of Roadway shall be removed.

No payment will be made for the rejected materials or the removal of the materials unless the Contractor requests that the rejected material be tested. If the Contractor elects to have the rejected material tested, a minimum of three representative samples will be obtained and tested. Acceptance of rejected material will be based on conformance with the nonstatistical acceptance Specification. If the CPF for the rejected material is less than 0.75, no payment will be made for the rejected material; in addition, the cost of sampling and testing shall be borne by the Contractor. If the CPF is greater than or equal to 0.75, the cost of sampling and testing will be borne by the Contracting Agency. If the material is rejected before placement and the CPF is greater than or equal to 0.75, compensation for the rejected material will be at a CPF of 0.75. If rejection occurs after placement and the CPF is greater than or equal to 0.75, compensation for the rejected material will be at the calculated CPF with an addition of 25 percent of the unit Contract price added for the cost of removal and disposal.

5-04.3(11)D Rejection – A Partial Sublot

In addition to the random acceptance sampling and testing, the Engineer may also isolate from a normal sublot any material that is suspected of being defective in relative density, gradation or asphalt binder content. Such isolated material will not include an original sample location. A minimum of three random samples of the suspect material will be obtained and tested. The material will then be non-statistically evaluated as an independent lot in accordance with Section 5-04.3(9)C4.

5-04.3(11)E Rejection – An Entire Sublot

An entire sublot that is suspected of being defective may be rejected. When a sublot is rejected a minimum of two additional random samples from this sublot will be obtained. These additional samples and the original sublot will be evaluated as an independent lot in accordance with Section 5-04.3(9)C4.

5-04.3(11)F Rejection – A Lot in Progress

The Contractor shall shut down operations and shall not resume HMA placement until such time as the Engineer is satisfied that material conforming to the Specifications can be produced:

1. When the Composite Pay Factor (CPF) of a lot in progress drops below 1.00 and the Contractor is taking no corrective action; or

2. When the Pay Factor (PF) for any constituent of a lot in progress drops below 0.95 and the Contractor is taking no corrective action; or

3. When either the PF for any constituent or the CPF of a lot in progress is less than 0.75.

5-04.3(11)G Rejection – An Entire Lot (Mixture or Compaction)

An entire lot with a CPF of less than 0.75 will be rejected.

5-04.3(12) Joints

5-04.3(12)A HMA Joints

5-04.3(12)A1 Transverse Joints

The Contractor shall conduct operations such that the placing of the top or wearing course is a continuous operation or as close to continuous as possible. Unscheduled transverse joints will be allowed and the roller may pass over the unprotected end of the freshly laid mixture only when the placement of the course must be discontinued for such a length of time that the mixture will cool below compaction temperature. When the Work is resumed, the previously compacted mixture shall be cut back to produce a slightly beveled edge for the full thickness of the course.

A temporary wedge of HMA constructed on a 20H:1V shall be constructed where a transverse joint as a result of paving or planing is open to traffic. The HMA in the temporary wedge shall be separated from the permanent HMA by strips of heavy wrapping paper or other methods approved by the Engineer. The wrapping paper shall be removed and the joint trimmed to a slightly beveled edge for the full thickness of the course prior to resumption of paving.

The material that is cut away shall be wasted and new mix shall be laid against the cut. Rollers or tamping irons shall be used to seal the joint.

5-04.3(12)A2 Longitudinal Joints

The longitudinal joint in any one course shall be offset from the course immediately below by not more than 6 inches nor less than 2 inches. All longitudinal joints constructed in the wearing course shall be located at a lane line or an edge line of the Traveled Way. A notched wedge joint shall be constructed along all longitudinal joints in the wearing surface of new HMA unless otherwise approved by the Engineer. The notched wedge joint shall have a vertical edge of not less than the maximum aggregate size or more than ½ of the compacted lift thickness and then taper down on a slope not steeper than 4H:1V. The sloped portion of the HMA notched wedge joint shall be uniformly compacted.

5-04.3(13) Surface Smoothness

The completed surface of all courses shall be of uniform texture, smooth, uniform as to crown and grade, and free from defects of all kinds. The completed surface of the wearing course of the following sections of Roadway shall not vary more than 1/4 inch from the lower edge of a 10-foot straightedge placed on the surface parallel to centerline:

1. roads less than 45 mph

The completed surface of the wearing course of all other sections of Roadway shall not vary more than 1/8 inch from the lower edge of a 10-foot straightedge placed on the surface parallel to centerline.

The transverse slope of the completed surface of the wearing course shall vary not more than 1/4 inch in 10 feet from the rate of transverse slope shown in the Plans.

When deviations in excess of the above tolerances are found that result from a high place in the HMA, the pavement surface shall be corrected by one of the following methods:

1. Removal of material from high places by grinding with an approved grinding machine; or

2. Removal and replacement of the wearing course of HMA; or

3. By other method approved by the Engineer.

Correction of defects shall be carried out until there are no deviations anywhere greater than the allowable tolerances.

Deviations in excess of the above tolerances that result from a low place in the HMA and deviations resulting from a high place where corrective action, in the opinion of the Engineer, will not produce satisfactory results will be accepted with a price adjustment. The Engineer shall deduct from monies due or that may become due to the Contractor the sum of $500.00 for each and every section of single traffic lane 100 feet in length in which any excessive deviations described above are found.

All utility castings and monuments within the existing and/or new pavement area shall be referenced by the Contractor prior to any pavement removal or planing. The Contractor shall keep a record of such references, and submit a copy to the Contracting Agency.

Existing structures and new structures shall be adjusted to the finished grade as shown on the Plans and as further specified herein. Existing boxes, rings, grates, covers, and lids shall be reset in a careful and workmanlike manner to conform to the required grades.

The new and existing utility castings and monuments shall be adjusted to grade in the following manner:

As soon as the street has been paved past each structure or casting, the asphalt concrete mat shall be scored around the location of the structure or casting. After rolling has been completed and the mat has cooled, it shall be cut along the scored lines. The structure or casting shall then be raised to finished pavement grade and the annular spaces filled as indicated on the Plans. The Contractor shall install the pavement to give a smooth finished appearance. All covers, lids, frames, and grates shall be thoroughly cleaned.

After pavement is in place, all new pavement joints shall be sealed with a 6-inch-wide strip of hot asphalt sealer. A sand blanket shall be applied to the surface of the hot asphalt sealer immediately after the placement of the sealer to help alleviate the tracking of the asphalt. The sealer shall meet the requirements of Section 9-04.2(1) of the Standard Specifications.

5-04.3(14)B Paving and Planing Under Traffic

5-04.3(14)B1 General

In addition, the requirements of Section 1-07.23 and the traffic controls required in Section 1-10, and unless the Contract specifies otherwise or the Engineer approves, the Contractor must comply with the following:

1. Intersections

   a. Keep intersections open to traffic at all times, except when paving or planing operations through an intersection requires closure. Such closure must be kept to the minimum time required to place and compact the HMA mixture, or plane as appropriate. For paving, schedule such closure to individual lanes or portions thereof that allows the traffic volumes and schedule of traffic volumes required in the approved traffic control plan. Schedule work so that adjacent intersections are not impacted at the same time and comply with the traffic control restrictions required by the Traffic Engineer. Each individual intersection closure or partial closure, must be addressed in the traffic control plan, which must be submitted to and accepted by the Engineer, see Section 1-10.2(2).

   b. When planing or paving and related construction must occur in an intersection, consider scheduling and sequencing such work into quarters of the intersection, or half or more of an intersection with side street detours. Be prepared to sequence the work to individual lanes or portions thereof.

   c. Should closure of the intersection in its entirety be necessary, and no trolley service is impacted, keep such closure to the minimum time required to place and compact the HMA mixture, plane, remove asphalt, tack coat, and as needed.

   d. Any work in an intersection requires advance warning in both signage and a number of Working Days advance notice as determined by the Engineer, to alert traffic and emergency services of the intersection closure or partial closure.

e. Allow new compacted HMA asphalt to cool to ambient temperature before any traffic is allowed on it. Traffic is not allowed on newly placed asphalt until approval has been obtained from the Engineer.

2. Temporary centerline marking, post-paving temporary marking, temporary stop bars, and maintaining temporary pavement marking must comply with Section 8-23.

3. Permanent pavement marking must comply with Section 8-22.

4. Roadways Open to Traffic

When the roadway being paved is open to traffic, the following requirements shall apply:

The Contractor shall keep roadways open to traffic at all times except where paving is in progress. During such time, and provided that there has been an advance warning to the public, only that specified section of road being paved may be closed for the minimum time required to place and compact the HMA. Adjacent travel lanes and shoulder shall be left open for traffic during these times. In hot weather, the Engineer may require the application of water to the pavement to accelerate the finish rolling of the pavement and to shorten the time required before reopening to traffic.

Before temporarily closing a portion of the road, advance-warning signs shall be placed and signs shall also be placed clearly alerting the driver of temporary lane closures.

During paving operations, temporary pavement markings shall be maintained throughout the project. Temporary pavement markings shall be installed on the roadway prior to opening to traffic and shall be in accordance with Section 8-23.

All costs in connection with performing the Work in accordance with these requirements shall be included in the unit contract prices for the various bid items involved in the Contract.

5-04.3(14)B2 Submittals – Planing Plan and HMA Paving Plan

The Contractor must submit a separate planing plan and a separate paving plan to the Engineer at least 5 Working Days in advance of each operation's activity start date. These plans must show how the moving operation and

traffic control are coordinated, as they will be discussed at the pre-planing briefing and pre-paving briefing. When requested by the Engineer, the Contractor must provide each operation's traffic control plan on 24 x 36 inch or larger size Shop Drawings with a scale showing both the area of operation and sufficient detail of traffic beyond the area of operation where detour traffic may be required. The scale on the Shop Drawings is 1 inch = 20 feet, which may be changed if the Engineer agrees sufficient detail is shown.

The planing operation and the paving operation include, but are not limited to, metal detection, removal of asphalt and temporary asphalt of any kind, tack coat and drying, staging of supply trucks, paving trains, rolling, scheduling, and as may be discussed at the briefing.

When intersections will be partially blocked or when allowed to be totally blocked, provide adequately sized and noticeable signage alerting traffic of closures to come, a minimum 2 Working Days in advance. The traffic control plan must show where police officers will be stationed when signalization is or may be, countermanded, and show areas where flaggers are proposed.

At a minimum, the planing and the paving plan must include:

1. A copy of the accepted traffic control plan, see Section 1-10.2(2), detailing each day's traffic control as it relates to the specific requirements of that day's planing and paving. Briefly describe the sequencing of traffic control consistent with the proposed planing and paving sequence, and scheduling of placement of temporary pavement markings and channelizing devices after each day's planing, and paving.

2. A copy of each intersection's traffic control plan.

3. Haul routes from Supplier facilities, and locations of temporary parking and staging areas, including return routes. Describe the complete round trip as it relates to the sequencing of paving operations.

4. Names and locations of HMA Supplier facilities to be used.

5. List of all equipment to be used for paving.

6. List of personnel and associated job classification assigned to each piece of paving equipment.

7. Description (geometric or narrative) of the scheduled sequence of planing and of paving, and intended area of planing and of paving for each day's work, must include the directions of proposed planing and of proposed paving, sequence of adjacent lane paving, sequence of skipped lane paving, intersection planing and paving scheduling and sequencing, and proposed notifications and coordinations to be timely made. The plan must show HMA joints relative to the final pavement marking lane lines.

8. Names, job titles, and contact information for field, office, and plant supervisory personnel.

9. A copy of the approved Mix Designs.

10. Tonnage of HMA to be placed each day.

11. Approximate times and days for starting and ending daily operations.

5-04.3(14)B3 Pre-Paving and Pre-Planing Briefing

At least 2 Working Days before the first paving operation and the first planing operation, or as scheduled by the Engineer for future paving and planing operations to ensure the Contractor has adequately prepared for notifying and coordinating as required in the Contract, the Contractor must be prepared to discuss that day's operations as they relate to other entities and to public safety and convenience, including driveway and business access, garbage truck operations, transit operations and working around energized overhead wires, school and nursing home and hospital and other accesses, other contractors who may be operating in the area, pedestrian and bicycle traffic, and emergency services. The Contractor, and Subcontractors that may be part of that day's operations, must meet with the Engineer and discuss the proposed operation as it relates to the submitted planing plan and paving plan, approved traffic control plan, and public convenience and safety. Such discussion includes, but is not limited to:

1. General for both Paving Plan and for Planing Plan:

   a. The actual times of starting and ending daily operations.

b. In intersections, how to break up the intersection, and address traffic control and signalization for that operation, including use of peace officers.

c. The sequencing and scheduling of paving operations and of planing operations, as applicable, as it relates to traffic control, to public convenience and safety, and to other contractors who may operate in the Project Site.

d. Notifications required of Contractor activities, and coordinating with other entities and the public as necessary.

e. Description of the sequencing of installation and types of temporary pavement markings as it relates to planning and to paving.

f. Description of the sequencing of installation of, and the removal of, temporary pavement patch material around exposed castings and as may be needed.

g. Description of procedures and equipment to identify hidden metal in the pavement, such as survey monumentation, monitoring wells, street car rail, and castings, before planning, see Section 5-04.3(14)B2.

h. Description of how flaggers will be coordinated with the planing, paving, and related operations.

i. Description of sequencing of traffic controls for the process of rigid pavement base repairs.

j. Other items the Engineer deems necessary to address.

2. Paving – additional topics:

a. When to start applying tack and coordinating with paving.

b. Types of equipment and numbers of each type equipment to be used. If more pieces of equipment than personnel are proposed, describe the sequencing of the personnel operating the types of equipment. Discuss the continuance of operator personnel for each type equipment as it relates to meeting Specification requirements.

c. Number of JMFs to be placed, and if more than one JMF how the Contractor will ensure different JMFs are distinguished, how pavers and MTVs are distinguished if more than one JMF is being placed at the time, and how pavers and MTVs are cleaned so that one JMF does not adversely influence the other JMF.

d. Description of contingency plans for that day's operations such as equipment breakdown, rain out, and Supplier shutdown of operations.

e. Number of sublots to be placed, sequencing of density testing, and other sampling and testing.

5-04.4 Measurement

Commercial HMA will be measured by the ton in accordance with Section 1-09.2, with no deduction being made for the weight of asphalt binder, mineral filler, or any other component of the mixture. If the Contractor elects to remove and replace mix as allowed by Section 5-04.3(11), the material removed will not be measured.

Temporary HMA will be measured by the ton in accordance with Section 1-09.2 with no deduction being made for the weight of asphalt binder, blending sand, mineral filler, or any other component of the HMA.

5-04.5 Payment

Payment will be made for each of the following Bid items that are included in the Proposal:

"Commercial HMA," per ton.

The unit contract price per ton for "Commercial HMA" shall include the cost for all labor, materials, equipment and tools for furnishing, placing, compacting and constructing asphalt pavement including mix design, anti-strip determination, mix design verification, preparation of untreated roadway, removing plastic traffic marking, removing RPMs, removing permanent striping, anti-stripping additive, soil residual herbicide, asphalt for tack coat, HMA pavement, HMA driveways/approaches, HMA wedge curb, spreading and finishing, water, compaction, sealing all cold joints with asphalt sealant (and sand blanket to alleviate tracking), temporary pavement markings, removal of temporary pavement markings, and all

other incidentals necessary for a complete paving system to the lines, cross section and grades in accordance with the Plans.

The unit contract price per ton for “Commercial HMA” shall be full compensation for all costs incurred to carry out the requirements of Section 5-04 except for those costs which are included in other items which are included in this Subsection and which are included in the Proposal.

“Temporary HMA,” per ton.

The unit contract price per ton for “Temporary HMA” shall be full pay to furnish, install, maintain, remove, and waste haul the temporary asphalt.

DIVISION 7

DRAINAGE STRUCTURES, STORM SEWERS, SANITARY SEWERS, WATER MAINS, AND CONDUITS

7-04 STORM SEWERS

7-04.2 Materials
(January 4, 2010 G&O)

Delete the sixth paragraph under this Section and replace it with the following:

> The Contractor shall provide the diameter and type of pipe specified on the Plans.

7-04.3(1)A General
(January 20, 2009 G&O)

This Section is supplemented with the following:

> All lines shall be flushed clean of all debris prior to acceptance. The debris shall be intercepted and collected at the nearest downstream point of access. The material shall then be loaded and wastehauled to a Contracting Agency approved dumpsite.
>
> All storm sewer lines shall be inspected with a television camera prior to final acceptance.

7-04.5 Payment
(January 7, 2013 G&O)

Delete all paragraphs under this section and replace with the following:

> Payment will be made in accordance with Section 1-04.1, for each of the following bid items that are included in the Proposal:
>
> "____ Storm Sewer Pipe, ____ In. Diam. (Incl. Bedding)," per linear foot.
>
> The unit contract price per linear foot of "____ Storm Sewer Pipe, ____ In. Diam. (Incl. Bedding)" shall constitute full compensation for all labor, materials, tools, equipment, transportation, supplies, and incidentals required to complete all work to furnish and install this item to include, but not limited to, excavation, pipe bedding, backfill with suitable native material, compaction, removal and wastehaul of excess or unsuitable trench excavation material, dewatering, bypass pumping and maintaining storm sewer flows, connections to existing and new systems, flushing and cleaning, and low pressure air testing.
>
> "Television Inspection," per lump sum.

7-05 MANHOLES, INLETS, CATCH BASINS, AND DRYWELLS

7-05.3 Construction Requirements
(January 20, 2009 G&O)

This Section is supplemented with the following:

The Contractor shall construct all manholes and catch basins from precast concrete bases and risers. Cast-in-place concrete bases shall only be used for "straddle" of existing systems and shall be watertight.

In areas of new and existing pavement, the grate rim elevation shall be set to promote drainage flow. In unimproved areas, the rim elevations shall be set 2 inches above finished grade unless otherwise shown on the Plans.

Dewatering shall be per Section 7-08.3(1).

Unless specifically noted herein or shown differently on the Plans, the Contractor shall connect to the catch basins with a heavy duty sand collar.

7-05.3(2) Abandon Existing Manholes
(November 1, 2011 G&O)

This Section is supplemented with the following:

The method for abandoning Type 2 catch basins is the method used to abandon manholes.

7-05.3(3) Connections to Existing Manholes
(June 16, 2006 G&O)

This Section is supplemented with the following:

The locations, type and size of the existing structures and lines have been determined from available records, and are approximate; however, it is anticipated that connections to these existing facilities may be made, in general, as shown on the Plans.

It shall be the responsibility of the Contractor to determine the exact location and ascertain the type and size of the existing facilities prior to starting work on each connection, and to provide any minor alterations, as required, at no additional cost to the Contracting Agency.

Where piping is to be connected to existing structures, the opening(s) shall be core-drilled in the structure. The use of jackhammers and/or sledgehammers to knock out the hole shall not be allowed.

7-05.5 Payment
(January 7, 2013 G&O)

Delete all paragraphs under this Section and replace with the following:

Payment will be made in accordance with Section 1-04.1, for each of the following bid items that are included in the Proposal:

"Catch Basin, Type 1," per each.

"Catch Basin, Type 2, ____ In. Diam.," per each.

The unit contract price per each for "Catch Basin, Type 1" or "Catch Basin, Type 2, ____ In. Diam." shall constitute full compensation for all labor, materials, tools, equipment, transportation, supplies, and incidentals required to complete all work to furnish and install this item to include, but not limited to, lids, frames and grates, structure excavation, foundation gravel, backfill with suitable native material, compaction, removal and wastehaul of excess or unsuitable excavated material, pipe connection, dewatering, bypass pumping and maintaining stormwater flows, and adjusting to finished grade.

"Adjust Catch Basin on 92nd Avenue NE," lump sum

The lump sum contract price for "Adjust Catch Basin on 92nd Avenue NE" shall include all costs to adjust the existing structures to the finished grade including, but not limited to, sawcutting, wastehaul of surplus material, furnishing and installing adjustment rings and blocks, concrete collars and patching the surrounding area with hot mix asphalt.

7-07 CLEANING EXISTING DRAINAGE STRUCTURES

7-07.4 Measurement
(January 20, 2009 G&O)

Delete this Section and replace with the following:

No specific unit of measurement will apply to cleaning existing drainage structures.

7-07.5 Payment
(November 24, 2010 G&O)

Delete this Section and replace with the following:

No separate or additional payment will be made for cleaning existing drainage structures. This work shall be considered incidental and shall be included in the various unit and lump sum contract prices.

7-08 GENERAL PIPE INSTALLATION REQUIREMENTS

7-08.2 Materials
(January 4, 2010 G&O)

This Section is supplemented with the following:

The pipe used on this project shall be the type and size specified on the Plans.

Bank run gravel for trench backfill shall meet the requirements of Section 9-03.19.

7-08.3(1)A Trenches
(November 24, 2010 G&O)

Delete the first three paragraphs under this Section and replace them with the following:

The length of trench excavation in advance of pipe laying shall be kept to a maximum of 100 feet. Excavation shall either be closed up at the end of the day or protected per Section 1.07.23(1).

The Contractor shall limit his excavation to the limits of the maximum payment width and depth shown on the Plans. If the Contractor purposely or neglectfully excavates trenches to a width or depth beyond the neat line payment limit of the trench as shown on the Plans, the expenses associated with any additional trenching, wastehaul, trench backfill, compaction and testing, and surface restoration as a result of excavating beyond the neat line payment limits shall be borne by the Contractor.

It is not anticipated that solid rock will be encountered. Should such material be encountered, the excavation, removal and wastehaul will be paid for by change order per Section 1-04.4. Boulders or broken rock less

than 2 cubic yards in volume, shall not be classified as rock, nor will so-called "hard-pan" or cemented gravel, even though it may be advantageous to use special equipment in its removal.

Trench excavation shall also include wastehauling all excess and/or unsuitable material encountered, including but not limited to, abandoned pipelines, concrete, asphalt, tree stumps, trees, logs, abandoned rail ties, piling, and riprap.

The Contractor shall furnish all equipment necessary to dewater the excavation. Before operations begin, the Contractor shall have sufficient pumping equipment and/or other machinery available on site to assure that the operation of any dewatering system can be maintained.

The Contractor shall dispose of the water in such a manner as not to cause a nuisance or menace to the public, and comply with all codes, regulations, and ordinances of applicable governing authorities with regard to drilling, dewatering, and erosion control.

The release of groundwater to its static level shall be performed in such a manner as to maintain the undisturbed state of the natural foundation soil, prevent disturbance of backfill and prevent movement of structures and pipelines.

The dewatering system shall be installed and operated by the Contractor so that the groundwater level outside the excavation is not reduced to the extent that would damage or endanger adjacent structures or property. Should settlement of the surrounding area and/or structures be observed, the Contractor shall cease dewatering operations and implement contingency plans. The cost of repairing any damage to adjacent structures, underground facilities or utilities and satisfactory restoration of above ground facilities to include fences, paving, concrete, etc., shall be the responsibility of the Contractor.

The Contractor shall be required to comply with all conditions and requirements mandated by the Department of Ecology for the construction, operation, and decommissioning of dewatering facilities.

The Contractor shall obtain approved grading and filling permits for all spoils material sites, from the Contracting Agency, County, or both as required. These permits shall be secured and paid for by the Contractor.

Existing abandoned asbestos cement pipes are located within the project limits at the approximate locations noted on the Plans. In addition, it is

the intent of this Contract that the Contractor abandon existing asbestos cement pipe in place to the limits indicated. The Contractor shall anticipate that the construction of this project will require cutting of asbestos pipe and further require the removal and disposal of asbestos cement pipe. All work shall be performed in compliance with the requirements of the WAC 296-65, National Emission Standards for Asbestos, Puget Sound Clean Air Agency, Labor and Industries and all Local, State and Federal Agencies having jurisdiction. All costs of this work shall be considered incidental for the Project and as such merged in the various items bid.

7-08.3(2)B Pipe Laying – General
(January 4, 2010 G&O)

This Section is supplemented with the following:

All pipe shall be unloaded from delivery vehicles with mechanical equipment. Dropping of pipe onto the ground or mats will not be permitted. All pipe and fittings shall be carefully lowered into the trench in such a way as to prevent damage to pipe materials and protective coatings and linings. Under no circumstances shall materials be dropped or dumped into the trench.

All pipe shall be laid in straight lines and at uniform rate for grade between structures. Variation in the invert elevation between adjoining ends of pipe due to non-concentricity of joining surface and pipe interior surfaces shall not exceed 1/64 inch per inch of pipe diameter, or 1/2-inch maximum.

Every precaution shall be taken to prevent foreign material from entering the pipe while it is being laid. After placing a length of pipe in the trench, the spigot end shall be centered in the bell and pipe forced home and brought to correct line and grade. The pipe shall be secured in place with pipe bedding tamped under it. Precaution shall be taken to prevent dirt from entering the joint space. At times when pipe laying is not in progress, the open ends of pipe shall be closed by a watertight plug or other means approved by the Contracting Agency. If water is in the trench when work resumes, the seal shall remain in place until the trench is dewatered as specified for groundwater control. Tee branches shall be blocked and sealed with the same joint and pipe material as used for pipes.

Care shall be taken to properly align, clean and lubricate the spigot and socket area of the pipes before joining. The pipe spigot shall be forced

into the socket until the reference mark on the spigot is flush with the bell end.

All connections to existing pipe of differing materials shall be made with adapters which are specifically manufactured for this purpose. If the band type adapters are used, then only stainless steel bands will be allowed.

The Contractor shall obtain approved grading and filling permits for all spoils material sites, from the Contracting Agency, County, or both as required. These permits shall be secured and paid for by the Contractor.

7-08.3(3) Backfilling
(January 4, 2010 G&O)

Delete the second paragraph under this Section and replace with the following:

Pipe zone backfill shall be gravel backfill for pipe zone bedding conforming to the requirements of Section 9-03.12(3).

This Section is supplemented with the following:

It is the intent of these Specifications to utilize suitable excavated material for trench backfill where available. The Contractor shall provide evidence from a testing laboratory that any native material deemed suitable by the Contractor meets the intent of these Specifications and can be compacted to minimum requirements. Excavated material suitable for trench backfill shall conform to the requirements of Section 9-03.15. However, the presence and location of suitable material is not guaranteed and will be as discovered in the field. Import material will be required and shall be utilized when necessary, and as called out on the Plans and further preapproved by the Contracting Agency.

7-08.3(4) Plugging Existing Pipe
(April 24, 2009 G&O)

This Section is supplemented with the following:

The Contractor shall anticipate that all existing pipes to be abandoned in place shall be plugged as specified herein.

7-08.4 Measurement
(January 7, 2013 G&O)

Delete all paragraphs under this Section and replace with the following:

Measurement for Removal of Unsuitable Material (Trench) will be per cubic yard of material removed below the foundation depth as shown on the Plans.

Measurement of Bank Run Gravel for Trench Backfill will be per ton. The measurement shall be calculated in accordance with the trench detail shown on the Plans and using a conversion factor for cubic yards to tons of 1.8 tons/cy. The Contractor shall provide the Contracting Agency with truckload tickets at the end of each day to be used to support the calculated quantities.

No specific unit of measurement will apply to the lump sum item Trench Excavation Safety System.

7-08.5 Payment
(January 7, 2013 G&O)

Delete all paragraphs under this Section and replace with the following:

Payment will be made in accordance with Section 1-04.1, for each of the following bid items that are included in the Proposal:

"Removal of Unsuitable Material (Trench)," per cubic yard.

The unit contract price per cubic yard for "Removal of Unsuitable Material (Trench)" shall constitute full compensation for all labor, materials, tools, equipment, transportation, supplies, and incidentals required to complete all work to remove unsuitable material below the trench bottom to include, but not limited to, excavation, removal and wastehaul of unsuitable excavated material and dewatering.

"Trench Excavation Safety Systems," lump sum.

The lump sum contract price for "Trench Excavation Safety Systems" shall include all costs of furnishing, installing, maintaining, and removing those items necessary to provide adequate safety systems for trench excavation, as specified in Section 2 09.3(4). This item shall be paid proportionate to the satisfactory installation of all facilities that require trench excavation safety systems including pipeline, conduits, walls,

embankments, and structures as noted in the Proposal, or otherwise required for the performance of this work.

"Bank Run Gravel for Trench Backfill," per ton.

The unit contract price per ton for "Bank Run Gravel for Trench Backfill" shall constitute full compensation for all labor, materials, tools, equipment, transportation, supplies, and incidentals required to complete all work to furnish and install the imported trench backfill to include, but not limited to, backfilling trenches, placing, shaping, compacting, wastehaul and disposal of excess native material.

All costs associated with furnishing and installing pipe bedding for storm sewer systems shall be included into the unit contract price for the type and size of pipe installed.

All costs to providing dewatering as required shall be included into the unit contract price for the type and size of pipe installed.

All costs of providing bypass pumping as required shall be included into the unit contract price for the type and size of pipe installed.

All costs associated with excavation, stockpiling, backfilling, compacting, and wastehauling of excavated native material shall be included in the unit contract price for the type and size of pipe installed.

DIVISION 8

MISCELLANEOUS CONSTRUCTION

8-01 EROSION CONTROL AND WATER POLLUTION CONTROL

8-01.1 Description

(******)

This Section is supplemented with the following:

This work also consists of preparing the Erosion Control Plan and implementing, inspecting and removal water pollution and erosion control items.

8-01.3 Construction Requirements

(November 24, 2010 G&O)

This Section is supplemented with the following:

The Contractor shall take all necessary precautions and utilize the Department of Ecology's (DOE) Best Management Practices to prevent sediment and fugitive dust from construction activities from entering into storm water systems, natural waterways, or environmentally sensitive areas and from otherwise being carried away from the construction area by stormwater or air.

Temporary erosion protection shall be furnished, installed, and maintained for the duration of this Project to protect environmentally sensitive areas, sloped surfaces, adjacent areas and/or water bodies or conveyance systems. Temporary erosion protection may include the use of straw, jute matting, wattles, heavy plastic sheeting, or other forms of ground cover on areas disturbed by construction. Sloped surfaces shall be restored and protected in such a manner that surface runoff does not erode the embankments, slopes, or ground surfaces, nor create surface channels, or ruts.

8-01.3(1)A Submittals

(January 7, 2013)

This Section is supplemented with the following:

The Contractor shall be required to prepare, maintain, and update the erosion control plan, as may be required during the course of the Project. The erosion control plan and details included are provided solely for the establishment of basic erosion control measures and are not intended to be a complete plan.

8-01.3(9)D Inlet Protection
(January 7, 2013)

This Section is supplemented with the following:

All catch basins grates within the project limits and adjacent areas shall have inlet protection installed to prevent sedimentation from entering the storm system. The inlet protection shall be routinely cleaned of sediment to prevent plugging. This sediment shall be regularly removed, loaded, and hauled to waste whenever it presents a potential surface accumulation problem or concern to the Contracting Agency. Any damage caused by the Contractor's failure to keep the erosion materials maintained shall be borne by the Contractor alone.

8-01.4 Measurement
(January 7, 2013 G&O)

This Section is supplemented with the following:

No specific unit of measure will apply to erosion/water pollution control.

8-01.5 Payment
(December 6, 2017 G&O)

Delete all paragraphs under this Section and replace with the following:

Payments will be made in accordance with Section 1-04.1 for the following Bid Item(s):

The lump sum contract price for "Erosion/Water Pollution Control" shall include all costs for preparing an erosion control plan, along with furnishing, installing, maintaining, and removal of erosion/water pollution control devices.

8-02 ROADSIDE RESTORATION

8-02.1 Description
(January 7, 2013 G&O)

This Section is supplemented with the following:

This work also includes all sod work on the site. The sod shall be installed using the materials shown on the Plans and/or as specified in these Special Provisions.

8-02.2 Materials
(January 7, 2013 G&O)

This Section shall be supplemented with the following:

Provide sod as follows:

Mixture:	60% Perennial Turf Type Ryegrass
	20% Hybrid Kentucky Bluegrass
	20% Fescue
Ryegrass:	60% by weight
	TARA Perennial Ryegrass
	DANDY Perennial Ryegrass
	SHERWOOD Perennial Ryegrass
Fescue:	20% by weight
	SPARTAN Hard Fescue

Sod shall:

- Contain no more than 1 percent other grasses, none of which is coarse or of undesirable variety.
- Be free of weeds, pests, and diseases.
- Contain no more than 1 percent Poa Anna (annual bluegrass).
- Be not less than 10 months old and no more than 14 months old; healthy and with a dense, vigorous, well-developed root structure.
- Be grown on fumigated soil with intensive care and cultivation under rigid quality control.
- Be cut from fields no more than 24 hours before delivery to jobsite.

Bark mulch for planting strip areas and surface restoration adjacent to sidewalks shall conform to Section 9-14.4(3).

8-02.3(3)B Chemical Pesticides
(January 7, 2013 G&O)

This Section is supplemented with the following:

No chemical herbicides will be allowed in planting areas.

8-02.3(4) Topsoil
(January 7, 2013 G&O)

This Section is supplemented with the following:

The costs of removing all excess material and debris shall be considered incidental to the Project and as such merged in the various items bid.

Cultivate 4 inches of imported topsoil, Type A into the existing subgrades to a minimum transition depth of 6 inches in areas to be seeded with topsoil, in sod areas, in planting strip areas and in fill slopes to be planted, as shown on the Plans.

8-02.3(4)A Topsoil Type A
(January 7, 2013 G&O)

This Section is supplemented with the following:

Imported Topsoil, Type A, shall be a mixture of 10 percent compost by volume and 90 percent sandy loam by volume as defined by USDA soil texture triangle, screened through a 3/8-inch screen or approved equal. Compost shall be made from ground yard waste that has first been screened through a 5/8-inch trammel screen. The composting process shall include five 3-day periods during which the compost temperature is 131 to 165 degrees Fahrenheit. The total composting time period shall be a minimum of 4 months. Topsoil shall be weed free.

8-02.3(16)B Lawn Establishment
(January 7, 2013 G&O)

This Section is supplemented with the following:

Prior to laying sod, the initial application of the 10-20-20 fertilizer shall be spread and raked into the topsoil. When grass reaches 2 inches in height and before mowing, apply the second application of 10-20-20.

Sod shall be placed in accordance with standard horticultural practices. Dry soil shall be moistened by sprinkling. All butt joints shall be staggered. On sloped areas, the sod shall be laid with the long dimension parallel to the toe or top of slope. After placing, the sod shall be rolled and heavily watered by sprinkler.

The Contractor shall be responsible for watering and fertilizing the sod until physical completion of the Project. Watering shall be scheduled to prevent drying of joints between sod strips. Four weeks after the first mowing, 6-2-4 fertilizer shall be applied and reapplied at 6-week intervals.

Inspection and Substantial Completion

After completion of all sodding and seeding, including the post-planting fertilization which follows the first mowing, the Contracting Agency will review the sodded or seeded areas for adequacy. Areas not fully established (sod) or germinated (seeded) with a uniform stand of grass, or areas damaged through any cause prior to this inspection shall be resodded/reseeded, by the Contractor as herein specified and at the Contractor's sole expense as no additional monies will be due the Contractor. "Uniform stand of grass" shall signify complete cover of lush, thriving, green grass with no bare spots.

Reseeding

Reseed and fertilize with 6-2-4 at a rate of 400 pounds (30 pounds) per 1,000 square foot, all areas failing to show a uniform stand of grass after germination of seed, or damage through any cause before physical completion of the Project.

8-02.4 Measurement
(December 6, 2017 G&O)

Delete all paragraphs under this Section and replace with the following:

Topsoil, Type ___ will be measured by the cubic yard to the nearest 0.5 cubic yard in the haul conveyance or container at the point of delivery. The Resident Inspector shall be given a copy of the trip ticket or other such evidence, which lists the quantity delivered and placed on site. The Contractor shall coordinate same.

Bark or Wood Chip Mulch will be measured by the cubic yard in the haul conveyance or container at the point of delivery. The Resident Inspector shall be given a copy of the trip ticket or other such evidence, which lists the quantity delivered and placed on site. The Contractor shall coordinate same.

Sod Installation will be measured by the square yard, along the ground slope.

8-02.5 Payment
(January 7, 2013 G&O)

Delete all paragraphs under this Section and replace with the following:

Payment will be made in accordance with Section 1-04.1 for each of the following listed bid items that are included in the Proposal:

"Property Restoration," per force account as provided in Section 1-09.6.

Property restoration that is not included in the contract lump sum or unit price bid items, and directed to be completed by the Contracting Agency, will be paid by force account in accordance with Section 1-09.6.

To provide a common Proposal for all Bidders, the Contracting Agency has entered an amount in the Proposal to become part of the Contractor's total bid.

The unit contract price per cubic yard for "Topsoil, Type A" shall be full pay for all costs necessary for providing the source of material for topsoil Type A, for pre-excavation weed control, excavating, loading, hauling, intermediate windrowing, stockpiling, weed control on stockpiles or windrows, and removal, furnishing, placing, cultivating, spreading, processing, and compacting the topsoil.

The unit contract price per cubic yard for "Bark or Wood Chip Mulch" shall be full pay for all costs necessary to furnish and install the bark mulch.

The unit contract price per square yard for "Sod Installation" shall be full pay for all costs necessary for weed control within the sodded area, to prepare the area, install the sod, erect barriers, establish sod lawn, resod as needed, fertilize, mow, and water.

8-06 CEMENT CONCRETE DRIVEWAY ENTRANCES

8-06.3 Construction Requirements
(September 18, 2018 G&O GSP)

This Section shall be supplemented with the following:

Before placing any concrete, the Contractor shall have on the job site enough protective paper, or equivalent, to cover the pour of an entire day in the event of rain or other unsuitable weather conditions.

Driveway access shall be maintained at all times. The Contractor shall use steel plates to bridge entrances or construct entrances in sections in order to protect new driveway entrances and allow access during the curing period.

The placing and compaction of the subgrade and crushed surfacing shall be in accordance with the requirements of the applicable sections of the Standard Specifications and these Special Provisions.

The driveway repairs shall be protected against damage or defacement of any kind until acceptance by the Contracting Agency. Any driveway repair not acceptable, in the opinion of the Engineer, because of damage or defacement shall be removed, wastehauled, and replaced by the Contractor at the Contractor's expense. Sacking, grinding, or spot repair shall not be considered an acceptable means for repairing unacceptable sections.

8-06.4 Measurement
(November 21, 2009)

Delete this Section and replace with the following:

Cement Concrete Driveway Repair will be measured by the square yard of cement concrete driveway installed.

8-06.5 Payment
(January 7, 2013 G&O)

This Section is supplemented with the following:

The unit contract price per square yard for "Cement Concrete Driveway Repair" shall be full compensation for all labor, tools, equipment, materials, and incidentals required to perform the work as specified including, but not limited to, forming, joint material, furnishing and installing the concrete, matching existing color and texture of concrete driveway to remain, finishing, protecting the work, and temporary steel plating.

8-09 RAISED PAVEMENT MARKERS

8-09.3 Construction Requirements
(June 16, 2006 G&O)

This Section is supplemented with the following:

One Blue Raised Pavement Marker, Type 2 shall be placed in-line with the lane line that is closest to the hydrant perpendicular to the centerline of the roadway in front of each fire hydrant. On a two-lane roadway, the marker shall be offset from the centerline 4 inches toward the hydrant location.

8-18 MAILBOX SUPPORT

8-18.3 Construction Requirements
(June 10, 2009 G&O)

This Section is supplemented with the following:

During construction mailboxes and/or paper boxes shall be moved to a temporary location where their usefulness will not be impaired. Posts shall be removed from their fixed location and be placed in a bucket or other suitable container and filled with sand, gravel, or other suitable means to hold them in place. Existing posts shall be cut to length as necessary such that the height from the ground to the bottom of the box is 3'-6". Temporary box locations shall be located such that delivery can be accomplished from within the delivery vehicle and shall be maintained at all times. Mailbox relocations shall be in accordance with U.S. Postal Service requirements.

8-18.5 Payment
(June 10, 2009 G&O)

This Section is supplemented with the following:

"Remove, Protect and Reinstall Mailbox Pagoda," per each.

The unit contract price per each for "Remove, Protect, and Reinstall Mailbox Pagoda" shall be full pay for all material, equipment, labor, and tools required to remove the existing mailbox pagoda, maintain temporary access to the mailboxes, protect existing structure, removal of existing concrete footing(s), and reinstallation of the structure as further detailed on the Plans.

8-21 PERMANENT SIGNING

8-21.3(4) Sign Removal
(January 4, 2010 G&O)

This Section is supplemented with the following:

The Contractor shall obtain approval from the Engineer prior to removing existing signs.

8-21.3(5) Sign Relocation
(January 4, 2010 G&O)

This Section is supplemented with the following:

All existing signs not designated for permanent removal that are damaged or removed shall be replaced by the Contractor at no additional expense to the Contracting Agency.

Existing signs shall be temporarily relocated by the Contractor, as required, to portable sign stands, subject to the approval of the Engineer. When temporarily installed on posts, the signs shall be located as near as practical to their permanent locations and shall have a minimum vertical clearance above the pavement in accordance with the Manual on Uniform Traffic Control Devices (MUTCD).

All portable sign stands shall be designed to rigidly support the sign in position without creating a hazard to the motorist. Portable sign stands shall be furnished by the Contractor and upon completion of the work shall remain the property of the Contractor and shall be removed from the Project.

8-21.5 Payment
(November 24, 2010 G&O)

This Section is supplemented with the following:

"Permanent Signing," per lump sum.

The lump sum contract price for "Permanent Signing" shall be full pay for all material, labor, tools, and equipment necessary to remove, protect, and reinstall existing signs including posts, concrete anchors, and fasteners, as specified herein and shown on the Plans, as well as furnishing and installing all new permanent signs as may be specified on the Plans.

8-50 AERIAL UTILITY CONVERSION (NEW SECTION)

8-50.1 Description

This work shall consist of converting overhead aerial utilities to underground, installation of conduit and structures for new underground systems. The Work includes excavating the joint utility trench, installing bedding material, installing conduits, backfilling the joint utility trench, and coordinating with the utility companies and the Contracting Agency.

The conduits to be installed in the joint utility trench are shown on the Plans. Utility provided structures are shown in the Appendix. The Contractor shall provide the excavation, bedding and backfill for the utility structures. The table below indicates who will be installing the conduit and cable in the joint utility trench:

Owned by	Item	Furnished by	Installed by
Puget Sound Energy (PSE)	conduit and utility structures	PSE	Contractor
CenturyLink	conduit and utility structures	Century Link	Contractor
Comcast	Conduits and utility structures	Comcast	Contractor

Unless otherwise noted, the locations of the junction boxes, vaults, and appurtenances shown on the plans are approximate, and the exact locations are to be determined in the field to minimize interference with other structures.

The joint utility plans and details are intended for providing an overview of the work and for bidding purposes. It shall be the Contractor's responsibility to construct a joint utility trench along the approximate lines and grades shown which shall result in a successful conversion of the aerial utilities to underground. Prior to beginning the work, the Contractor shall verify the trench widths, depths and number of conduits shown on the utility conversion plans and shall coordinate utility crossings. The Contractor shall furnish and install a complete system.

The Contractor is alerted that proposed underground storm drain, water, sewer and other appurtenances may conflict with other overhead utility poles and underground utilities which cannot be removed until after the completion of the aerial utility conversion.

The Contractor shall provide the following:

General

- Advanced notice (minimum of 10 business days) and coordination with the franchise utilities, their inspectors, and their Contractors. This shall include layout, survey, grade control, delivery of materials, coordination of traffic bearing vault frames and lids, adjustable frames and lids, and providing final adjustments of lids to match final grades, and other items to ensure the joint utility trench is constructed satisfactorily and free of conflicts with other items of work. It is anticipated that the franchise utilities will attend the weekly meetings.
- Provide off-loading, staging and secure material storage.
- Coordinate temporary poles and/or support of existing poles as necessary.
- Excavation, bedding, and backfill for the joint utility trench.
- Excavation for structures (vaults, pedestals, handholes, junction boxes), as noted.
- Installation of structures (vaults, pedestals, handholes, junction boxes) furnished by PSE, CenturyLink and Comcast including excavation, foundation, bedding, and backfill.
- Provide continuous installation of conduit and structures.
- Mandrel and proof all conduits installed by Contractor and verify that duct system is clear of obstructions and damage. Install mule tape.
- Advanced notice and coordination of electrical permits and inspection.
- Advanced notice and coordination with the private utilities for their acceptance/rejection, installation, cut-over, conversion, and demolition.
- Traffic control for the joint utility trench excavation, installation of bedding and conduits, and backfilling of trench and excavation for utility structures.

8-50.2 Materials

Contractor supplied conduits and junction boxes shall be as specified in Sections 8-20 and 9-29.

Utility trench bedding shall be sand.

Vault foundation material shall be crushed surfacing top course.

Excavated material or imported material meeting the requirements, bank run gravel for trench backfill shall be installed per Section 7-08.3(3).

8-50.3 Construction Requirements

The Contractor is advised that the layout shown on the Plans is approximate. The layout of the joint-utility trench, transformers, vaults, pedestals, handholes and junction boxes shall be adjusted as necessary to avoid conflicts with utilities, both existing and to be constructed under this Contract. It shall be the Contractor's responsibility to construct the joint utility trench so that it will not require adjustments or replacements for other items of Work. The Contractor is also alerted that all improvements for the aerial utility conversion must remain within the right-of-way as noted on the Plans. All adjustments to the layout shown must be reviewed and approved by the Engineer.

The Contractor shall install conduit with proper sweeps into structures and around obstructions, and at proper elevations into structures. The Contractor shall maintain proper depth and separation between utilities.

Installation of franchise utility conduits shall be per the requirements of the franchise utilities. The Contractor shall perform franchise utility work under the supervision and inspection of the franchise utility representatives.

Excavation, bedding, and backfill of the joint utility trench shall be as generally described in Section 7-08 and 8-20 of the Standard Specifications.

Shoring or Extra Excavation for the joint utility trench and structure excavation shall be performed in accordance with specification Section 2-09.

The Contractor shall coordinate with franchise utilities for material delivery, offload, store and install conduit and structures (vaults, junction boxes, handholes) furnished and delivered to the site by the franchise utilities where indicated on the Plans. The Contractor shall coordinate delivery and storage of structures as necessary. All structures shall be installed to match finished grade.

The Contractor shall provide a secure staging area for PSE, CenturyLink, and Comcast. The area must be large enough to safely receive and store materials delivered to site as part of the conversion. The Contractor, at all times, shall make the staging areas available for use by the franchise utilities and their contractors and inspectors. The Contractor is solely responsible for materials on site.

8-50.4 Measurement

No separate measurement will be made for coordinating, receiving, storing materials; installing and furnishing conduit spacers, foundation bedding for vaults, vault connections, backfilling with native soils, final adjustment of vaults, mandrelling, and proofing of conduit, and pull strings which are incidental to the various bid items in this section.

8-50.5 Payment

Payment will be made in accordance with Section 1-04.1 for the following bid items:

"Resolution of Utility Conflicts for Joint Utility Trench," per force account.

"Franchise Utility Coordination," per lump sum.

The lump sum price for "Franchise Utility Coordination" shall be full pay for coordinating the storage of franchise utility conduit and structures; installation of franchise installed conduit and structures, and all other coordination required to the aerial conversation.

"Joint Utility Trench, 18 In. – 24 In. Wide," per linear foot.

"Joint Utility Trench 30 In. – 36 In. Wide," per linear foot.

"Joint Utility Trench, 42 In. – 48 In. Wide," per linear foot.

The unit contract price per linear foot for "Joint Utility Trench, ___ In. – ___ In. Wide" shall be full pay for all costs to excavate the utility trench, wastehaul excess or unsuitable material, install bedding material, backfill with suitable native material, and all disposal fees.

"Shoring Franchise Utility," per lump sum.

The lump sum price for Shoring Franchise Utility shall be full compensation for shoring the joint trench and excavation for franchise utility structures.

"Install Conduit, __ In. Diam. – PSE," per linear foot.

"Install Conduit, __ In. Diam. – CenturyLink," per linear foot.

"Install Conduit, __ In. Diam. – Comcast," per linear foot.

The unit contract price per linear foot for "Install Conduit, __ In. Diam. – PSE," "Install Conduit, _In Diam. – Century Link" and "Install Conduit, __ In. Diam. – Comcast" shall be full pay for installing utility provided conduit, pipe connections, elbows, bends, sweeps, mandrel and proofing of conduit, and pull strings.

"Install Utility Structure, PSE, Junction Box," per each.

"Install Utility Structure, PSE, Transformer," per each.

"Install Utility Structure, PSE, Handhole," per each.

"Install Utility Structure, CenturyLink, Handhole," per each.

"Install Utility Structure, Century Link, Vault," per each.

"Install Utility Structure, Comcast, Vault," per each.

"Install Utility Structure, Comcast, Shutter Box," per each.

The unit price per each for "Install Utility Structure, _____, _____" shall include all labor, material and equipment costs to excavate, furnish, place and remove steel plates for connections to existing structures or conduit; install crushed surfacing top course pad for pedestals, install utility provided structures, relocate existing utility structure, backfill with suitable native material, and compact.

PART 4

AMENDMENTS TO THE STANDARD SPECIFICATIONS

INTRO.AP1

INTRODUCTION

The following Amendments and Special Provisions shall be used in conjunction with the 2018 Standard Specifications for Road, Bridge, and Municipal Construction.

AMENDMENTS TO THE STANDARD SPECIFICATIONS

The following Amendments to the Standard Specifications are made a part of this contract and supersede any conflicting provisions of the Standard Specifications. For informational purposes, the date following each Amendment title indicates the implementation date of the Amendment or the latest date of revision.

Each Amendment contains all current revisions to the applicable section of the Standard Specifications and may include references which do not apply to this particular project.

1-01.AP1

Section 1-01, Definitions and Terms
August 6, 2018

1-01.3 Definitions

The following new term and definition is inserted before the definition for “Shoulder”:

> **Sensitive Area** – Natural features, which may be previously altered by human activity, that are present on or adjacent to the project location and protected, managed, or regulated by local, tribal, state, or federal agencies.

The following new term and definition is inserted after the definition for “Working Drawings”:

> **WSDOT Form** – Forms developed and maintained by WSDOT that are required or available for use on a project. These forms can be downloaded from the forms catalogue at:
>
> http://wsdot.wa.gov/forms/pdfForms.html

1-02.AP1

Section 1-02, Bid Procedures and Conditions
June 3, 2019

1-02.4(1) General

This section is supplemented with the following:

> Prospective Bidders are advised that the Contracting Agency may include a partially completed Washington State Department of Ecology (Ecology) Transfer of Coverage (Ecology Form ECY 020-87a) for the Construction Stormwater General Permit (CSWGP) as part of the Bid Documents. When the Contracting Agency requires the transfer of coverage of the CSWGP to the Contractor, an informational copy of the Transfer of Coverage and the associated CSWGP will be included in the appendices. As a condition of Section 1-03.3, the Contractor is required to complete sections I, III, and VIII of the Transfer of Coverage and return the form to the Contracting Agency.

The Contracting Agency is responsible for compliance with the CSWGP until the end of day that the Contract is executed. Beginning on the day after the Contract is executed, the Contractor shall assume complete legal responsibility for compliance with the CSWGP and full implementation of all conditions of the CSWGP as they apply to the Contract Work.

1-02.5 Proposal Forms

The first sentence of the first paragraph is revised to read:

At the request of a Bidder, the Contracting Agency will provide a physical Proposal Form for any project on which the Bidder is eligible to Bid.

1-02.6 Preparation of Proposal

Item number 1 of the second paragraph is revised to read:

1. A unit price for each item (omitting digits more than two places to the right of the decimal point),

In the third sentence of the fourth paragraph, “WSDOT Form 422-031” is revised to read “WSDOT Form 422-031U”.

The following new paragraph is inserted before the last paragraph:

The Bidder shall submit with their Bid a completed Contractor Certification Wage Law Compliance form (WSDOT Form 272-009). Failure to return this certification as part of the Bid Proposal package will make this Bid Nonresponsive and ineligible for Award. A Contractor Certification of Wage Law Compliance form is included in the Proposal Forms.

1-02.13 Irregular Proposals

Item 1(h) is revised to read:

h. The Bidder fails to submit Underutilized Disadvantaged Business Enterprise Good Faith Effort documentation, if applicable, as required in Section 1-02.6, or if the documentation that is submitted fails to demonstrate that a Good Faith Effort to meet the Condition of Award was made;

Item 1(i) is revised to read the following three items:

i. The Bidder fails to submit a UDBE Bid Item Breakdown form, if applicable, as required in Section 1-02.6, or if the documentation that is submitted fails to meet the requirements of the Special Provisions;

j. The Bidder fails to submit UDBE Trucking Credit Forms, if applicable, as required in Section 1-02.6, or if the documentation that is submitted fails to meet the requirements of the Special Provisions; or

k. The Bid Proposal does not constitute a definite and unqualified offer to meet the material terms of the Bid invitation.

1-03.AP1

Section 1-03, Award and Execution of Contract
January 2, 2018

1-03.3 Execution of Contract

The first paragraph is revised to read:

> Within 20 calendar days after the Award date, the successful Bidder shall return the signed Contracting Agency-prepared Contract, an insurance certification as required by Section 1-07.18, a satisfactory bond as required by law and Section 1-03.4, the Transfer of Coverage form for the Construction Stormwater General Permit with sections I, III, and VIII completed when provided, and shall be registered as a contractor in the state of Washington.

1-03.5 Failure to Execute Contract

The first sentence is revised to read:

> Failure to return the insurance certification and bond with the signed Contract as required in Section 1-03.3, or failure to provide Disadvantaged, Minority or Women's Business Enterprise information if required in the Contract, or failure or refusal to sign the Contract, or failure to register as a contractor in the state of Washington, or failure to return the completed Transfer of Coverage for the Construction Stormwater General Permit to the Contracting Agency when provided shall result in forfeiture of the proposal bond or deposit of this Bidder.

1-05.AP1

Section 1-05, Control of Work
August 6, 2018

1-05.5 Vacant

This section, including title, is revised to read:

> **1-05.5 Tolerances**
>
> Geometrical tolerances shall be measured from the points, lines, and surfaces defined in Contract documents.
>
> A plus (+) tolerance increases the amount or dimension to which it applies, or raises a deviation from level. A minus (-) tolerance decreases the amount or dimension to which it applies, or lowers a deviation from level. Where only one signed tolerance is specified (+ or -), there is no specified tolerance in the opposing direction.
>
> Tolerances shall not be cumulative. The most restrictive tolerance shall control.
>
> Tolerances shall not extend the Work beyond the Right of Way or other legal boundaries identified in the Contract documents. If application of tolerances causes the extension of the Work beyond the Right of Way or legal boundaries, the tolerance shall be reduced for that specific instance.
>
> Tolerances shall not violate other Contract requirements. If application of tolerances causes the Work to violate other Contract requirements, the tolerance shall be reduced for that specific instance. If application of tolerances causes conflicts with other

components or aspects of the Work, the tolerance shall be reduced for that specific instance.

1-05.9 Equipment

The following new paragraph is inserted before the first paragraph:

Prior to mobilizing equipment on site, the Contractor shall thoroughly remove all loose dirt and vegetative debris from drive mechanisms, wheels, tires, tracks, buckets and undercarriage. The Engineer will reject equipment from the site until it returns clean.

This section is supplemented with the following:

Upon completion of the Work, the Contractor shall completely remove all loose dirt and vegetative debris from equipment before removing it from the job site.

1-06.AP1

Section 1-06, Control of Material
January 7, 2019

1-06.1(3) Aggregate Source Approval (ASA) Database

This section is supplemented with the following:

Regardless of status of the source, whether listed or not listed in the ASA database the source owner may be asked to provide testing results for toxicity in accordance with Section 9-03.21(1).

1-06.2(2)D Quality Level Analysis

This section is supplemented with the following new subsection:

1-06.2(2)D5 Quality Level Calculation – HMA Compaction

The procedures for determining the quality level and pay factor for HMA compaction are as follows:

1. Determine the arithmetic mean, X_m, for compaction of the lot:

$$X_m = \frac{\sum x}{n}$$

Where:
x = individual compaction test values for each sublot in the lot.
∑x = summation of individual compaction test values
n = total number test values

2. Compute the sample standard deviation, “S”, for each constituent:

$$S = \left[\frac{n\sum x^2 - \left(\sum x\right)^2}{n(n-1)} \right]^{\frac{1}{2}}$$

Where:

$\sum x^2 =$ summation of the squares of individual compaction test values
$(\sum x)^2 =$ summation of the individual compaction test values squared

3. Compute the lower quality index (Q_L):

$$Q_L = \frac{X_m - LSL}{S}$$

Where:
LSL = 92.0

4. Determine P_L (the percent within the lower Specification limit which corresponds to a given Q_L) from Table 1. For negative values of Q_L, P_L is equal to 100 minus the table P_L. If the value of Q_L does not correspond exactly to a figure in the table, use the next higher value.

5. Determine the quality level (the total percent within Specification limits):

   Quality Level = P_L

6. Using the quality level from step 5, determine the composite pay factor (CPF) from Table 2.

7. If the CPF determined from step 6 is 1.00 or greater: use that CPF for the compaction lot; however, the maximum HMA compaction CPF using an LSL = 92.0 shall be 1.05.

8. If the CPF from step 6 is not 1.00 or greater: repeat steps 3 through 6 using an LSL = 91.5. The value thus determined shall be the HMA compaction CPF for that lot; however, the maximum HMA compaction CPF using an LSL = 91.5 shall be 1.00.

1-06.2(2)D1 Quality Level Analysis

The following new sentence is inserted after the first sentence:

> The quality level calculations for HMA compaction are completed using the formulas in Section 1-06.2(2)D5.

1-06.2(2)D4 Quality Level Calculation

The first paragraph (excluding the numbered list) is revised to read:

> The procedures for determining the quality level and pay factors for a material, other than HMA compaction, are as follows:

1-06.6 Recycled Materials

The first three sentences of the second paragraph are revised to read:

> The Contractor shall submit a Recycled Material Utilization Plan on WSDOT Form 350-075A within 30 calendar days after the Contract is executed. The plan shall provide the Contractor's anticipated usage of recycled concrete aggregates for meeting the requirements of these Specifications. The quantity of recycled concrete aggregate will

be provided in tons and as a percentage of the Plan quantity for eligible material listed in Section 9-03.21(1)E Table on Maximum Allowable percent (By Weight) of Recycled Material.

The last paragraph is revised to read:

Within 30 calendar days after Physical Completion, the Contractor shall report the quantity of recycled concrete aggregates that were utilized in the construction of the project for each eligible item listed in Section 9-03.21(1)E. The Contractor's report shall be provided on WSDOT Form 350-075A, Recycled Materials Reporting.

1-06.6(1)A General

Item 1(a) in the second paragraph is revised to read:

a. The estimated costs for the Work for each material with 25 percent recycled concrete aggregate. The cost estimate shall include for each material a documented price quote from the supplier with the lowest total cost for the Work.

1-07.AP1

Section 1-07, Legal Relations and Responsibilities to the Public
April 1, 2019

1-07.5 Environmental Regulations

This section is supplemented with the following new subsections:

1-07.5(5) U.S. Army Corps of Engineers

When temporary fills are permitted, the Contractor shall remove fills in their entirety and the affected areas returned to pre-construction elevations.

If a U.S. Army Corps of Engineers permit is noted in Section 1-07.6 of the Special Provisions, the Contractor shall retain a copy of the permit or the verification letter (in the case of a Nationwide Permit) on the worksite for the life of the Contract. The Contractor shall provide copies of the permit or verification letter to all subcontractors involved with the authorized work prior to their commencement of any work in waters of the U.S.

1-07.5(6) U.S. Fish/Wildlife Services and National Marine Fisheries Service

The Contracting Agency will provide fish exclusion and handling services if the Work dictates. However, if the Contractor discovers any fish stranded by the project and a Contracting Agency biologist is not available, they shall immediately release the fish into a flowing stream or open water.

1-07.5(1) General

The first sentence is deleted and replaced with the following:

No Work shall occur within areas under the jurisdiction of resource agencies unless authorized in the Contract.

The third paragraph is deleted.

1-07.5(2) State Department of Fish and Wildlife

This section is revised to read:

In doing the Work, the Contractor shall:

1. Not degrade water in a way that would harm fish, wildlife, or their habitat.

2. Not place materials below or remove them from the ordinary high water line except as may be specified in the Contract.

3. Not allow equipment to enter waters of the State except as specified in the Contract.

4. Revegetate in accordance with the Plans, unless the Special Provisions permit otherwise.

5. Prevent any fish-threatening silt buildup on the bed or bottom of any body of water.

6. Ensure continuous stream flow downstream of the Work area.

7. Dispose of any project debris by removal, burning, or placement above high-water flows.

8. Immediately notify the Engineer and stop all work causing impacts, if at any time, as a result of project activities, fish are observed in distress or a fish kill occurs.

If the Work in (1) through (3) above differs little from what the Contract requires, the Contracting Agency will measure and pay for it at unit Contract prices. But if Contract items do not cover those areas, the Contracting Agency will pay pursuant to Section 1-09.4. Work in (4) through (8) above shall be incidental to Contract pay items.

1-07.5(3) State Department of Ecology

This section is revised to read:

In doing the Work, the Contractor shall:

1. Comply with Washington State Water Quality Standards.

2. Perform Work in such a manner that all materials and substances not specifically identified in the Contract documents to be placed in the water do not enter waters of the State, including wetlands. These include, but are not limited to, petroleum products, hydraulic fluid, fresh concrete, concrete wastewater, process wastewater, slurry materials and waste from shaft drilling, sediments, sediment-laden water, chemicals, paint, solvents, or other toxic or deleterious materials.

3. Use equipment that is free of external petroleum-based products.

4. Remove accumulations of soil and debris from drive mechanisms (wheels, tracks, tires) and undercarriage of equipment prior to using equipment below the ordinary high water line.

5. Clean loose dirt and debris from all materials placed below the ordinary high water line. No materials shall be placed below the ordinary high water line without the Engineer's concurrence.

6. When a violation of the Construction Stormwater General Permit (CSWGP) occurs, immediately notify the Engineer and fill out WSDOT Form 422-011, Contractor ECAP Report, and submit the form to the Engineer within 48 hours of the violation.

7. Once Physical Completion has been given, prepare a Notice of Termination (Ecology Form ECY 020-87) and submit the Notice of Termination electronically to the Engineer in a PDF format a minimum of 7 calendar days prior to submitting the Notice of Termination to Ecology.

8. Transfer the CSWGP coverage to the Contracting Agency when Physical Completion has been given and the Engineer has determined that the project site is not stabilized from erosion.

9. Submit copies of all correspondence with Ecology electronically to the Engineer in a PDF format within four calendar days.

1-07.5(4) Air Quality

This section is revised to read:

The Contractor shall comply with all regional clean air authority and/or State Department of Ecology rules and regulations.

The air quality permit process may include additional State Environment Policy Act (SEPA) requirements. Contractors shall contact the appropriate regional air pollution control authority well in advance of beginning Work.

When the Work includes demolition or renovation of any existing facility or structure that contains Asbestos Containing Material (ACM) and/or Presumed Asbestos-Containing Material (PACM), the Contractor shall comply with the National Emission Standards for Hazardous Air Pollutants (NESHAP).

Any requirements included in Federal and State regulations regarding air quality that applies to the "owner or operator" shall be the responsibility of the Contractor.

1-07.7(1) General

The first sentence of the third paragraph is revised to read:

When the Contractor moves equipment or materials on or over Structures, culverts or pipes, the Contractor may operate equipment with only the load-limit restrictions in Section 1-07.7(2).

The first sentence of the last paragraph is revised to read:

Unit prices shall cover all costs for operating over Structures, culverts and pipes.

1-07.9(1) General

The last sentence of the sixth paragraph is revised to read:

Generally, the Contractor initiates the request by preparing standard form 1444 Request for Authorization of Additional Classification and Rate, available at https://www.dol.gov/whd/recovery/dbsurvey/conformance.htm, and submitting it to the Engineer for further action.

1-07.9(2) Posting Notices

The second sentence of the first paragraph (up until the colon) is revised to read:

The Contractor shall ensure the most current edition of the following are posted:

The revision dates are deleted from all items in the numbered list.

The following new items are inserted after item number 1:

2. **Mandatory Supplement to EEOC P/E-1** published by US Department of Labor. Post for projects with federal-aid funding.

3. **Pay Transparency Nondiscrimination Provision** published by US Department of Labor. Post for projects with federal-aid funding.

Item number 2 through 12 are renumbered to 4 through 14, respectively.

1-07.11(2) Contractual Requirements

In this section, “creed” is revised to read “religion”.

Item numbers 1 through 9 are revised to read 2 through 10, respectively.

After the preceding Amendment is applied, the following new item number 1 is inserted:

1. The Contractor shall maintain a Work site that is free of harassment, humiliation, fear, hostility and intimidation at all times. Behaviors that violate this requirement include but are not limited to:

    a. Persistent conduct that is offensive and unwelcome.

    b. Conduct that is considered to be hazing.

    c. Jokes about race, gender, or sexuality that are offensive.

    d. Unwelcome, unwanted, rude or offensive conduct or advances of a sexual nature which interferes with a person’s ability to perform their job or creates an intimidating, hostile, or offensive work environment.

    e. Language or conduct that is offensive, threatening, intimidating or hostile based on race, gender, or sexual orientation.

    f. Repeating rumors about individuals in the Work Site that are considered to be harassing or harmful to the individual’s reputation.

1-07.11(5) Sanctions

This section is supplemented with the following:

Immediately upon the Engineer's request, the Contractor shall remove from the Work site any employee engaging in behaviors that promote harassment, humiliation, fear or intimidation including but not limited to those described in these specifications.

1-07.11(6) Incorporation of Provisions

The first sentence is revised to read:

The Contractor shall include the provisions of Section 1-07.11(2) Contractual Requirements (1) through (5) and the Section 1-07.11(5) Sanctions in every subcontract including procurement of materials and leases of equipment.

1-07.15(1) Spill Prevention, Control, and Countermeasures Plan

The last sentence of the first paragraph is revised to read:

An SPCC Plan template and guidance information is available at http://www.wsdot.wa.gov/environment/technical/disciplines/hazardous-materials/spill-prevent-report.

1-07.16(2)A Wetland and Sensitive Area Protection

The first sentence of the first paragraph is revised to read:

Existing wetland and other sensitive areas, where shown in the Plans or designated by the Engineer, shall be saved and protected through the life of the Contract.

1-07.18 Public Liability and Property Damage Insurance

Item number 1 is supplemented with the following new sentence:

This policy shall be kept in force from the execution date of the Contract until the Physical Completion Date.

1-08.AP1

Section 1-08, Prosecution and ProgressJanuary 7, 2019

1-08.1 Subcontracting

The first sentence of the seventh paragraph is revised to read:

All Work that is not performed by the Contractor will be considered as subcontracting except: (1) purchase of sand, gravel, crushed stone, crushed slag, batched concrete aggregates, ready-mix concrete, off-site fabricated structural steel, other off-site fabricated items, and any other materials supplied by established and recognized commercial plants; or (2) delivery of these materials to the Work site in vehicles owned or operated by such plants or by recognized independent or commercial hauling companies hired by those commercial plants.

The following new paragraph is inserted after the seventh paragraph:

The Contractor shall not use businesses (material suppliers, vendors, subcontractors, etc.) with federal purchasing exclusions. Businesses with exclusions are identified using the System for Award Management web page at www.SAM.gov.

1-08.5 Time for Completion

Item number 2 of the sixth paragraph is supplemented with the following:

f. A copy of the Notice of Termination sent to the Washington State Department of Ecology (Ecology); the elapse of 30 calendar days from the date of receipt of the Notice of Termination by Ecology; and no rejection of the Notice of Termination by Ecology. This requirement will not apply if the Construction Stormwater General Permit is transferred back to the Contracting Agency in accordance with Section 8-01.3(16).

1-08.7 Maintenance During Suspension

The fifth paragraph is revised to read:

The Contractor shall protect and maintain all other Work in areas not used by traffic. All costs associated with protecting and maintaining such Work shall be the responsibility of the Contractor.

1-09.AP1

Section 1-09, Measurement and Payment
August 6, 2018

1-09.2(1) General Requirements for Weighing Equipment

The last paragraph is supplemented with the following:

When requested by the Engineer, the Contractor's representative shall collect the tickets throughout the day and provide them to the Engineer's designated receiver, not later than the end of shift, for reconciliation. Tickets for loads not verified as delivered will receive no pay.

1-09.2(2) Specific Requirements for Batching Scales

The last sentence of the first paragraph is revised to read:

Batching scales used for concrete or hot mix asphalt shall not be used for batching other materials.

1-09.10 Payment for Surplus Processed Materials

The following sentence is inserted after the first sentence of the second paragraph:

For Hot Mix Asphalt, the Plan quantity and quantity used will be adjusted for the quantity of Asphalt and quantity of RAP or other materials incorporated into the mix.

2-01.AP2

Section 2-01, Clearing, Grubbing, and Roadside Cleanup
April 1, 2019

2-01.2(3) Disposal Method No. 3 – Chipping

Item number 2 of the first paragraph is revised to read:

2. Chips shall be disposed outside of sensitive areas, and in areas that aren't in conflict with permanent Work.

2-02.AP2

Section 2-02, Removal of Structures and Obstructions
April 2, 2018

2-02.3(3) Removal of Pavement, Sidewalks, Curbs, and Gutters

In item number 3 of the first paragraph, the second sentence is revised to read:

> For concrete pavement removal, a second vertical full depth relief saw cut offset 12 to 18 inches from and parallel to the initial saw cut is also required, unless the Engineer allows otherwise.

2-03.AP2

Section 2-03, Roadway Excavation and Embankment
April 1, 2019

2-03.3(14)F Displacement of Unsuitable Foundation Materials

This section, including title, is revised to read:

> **2-03.3(14)F Vacant**

2-09.AP2

Section 2-09, Structure Excavation
April 1, 2019

2-09.2 Materials

In the first paragraph, the references to “Portland Cement” and “Aggregates for Portland Cement Concrete” are revised to read:

Cement	9-01
Fine Aggregate for Concrete	9-03.1(2)

2-09.3(3)B Excavation Using Open Pits – Extra Excavation

The last two paragraphs are deleted and replaced with the following:

> The excavation height (Ht) shall be calculated within a vertical plane as the difference between the lowest elevation in the excavation and the highest elevation of the ground surface immediately adjacent to the excavation. Pavement thickness and other surface treatments existing at the time of the excavation shall be included in the height calculation.
>
> **Submittals and Design Requirements**
> Excavations 4-feet and less in height do not require design and submittals. The Contractor shall provide a safe work environment and shall execute the work in a manner that does not damage adjacent pavements, utilities, or structures. If the Engineer determines the Contractor’s work may potentially affect adjacent traffic, pavements, utilities, or structures, the Engineer may request a Type 1 Working Drawing from the Contractor. The Contractor shall explain in the Type 1 Working Drawing how the Engineer’s concerns will be addressed, why infrastructure will not be damaged by the work, and how worker safety will be preserved.

For excavations that have soil types and slope geometries defined in WAC 296-155 part N and are between 4-feet and 20-feet in height, the Contractor shall submit Type 2 Working Drawings. Required submittal elements include, at a minimum, the following:

1. A plan view showing the limits of the excavation and its relationship to traffic, structures, utilities and other pertinent project elements. If the stability of the excavation requires no-load zones or equipment setback distances, those shall be shown on the plan view.

2. A typical or controlling cross section showing the proposed excavation, original ground line, and locations of traffic, existing structures, utilities, site constraints, surcharge loads, or other conditions that could affect the stability of the slope. If the stability of the excavation requires no-load zones or equipment setback distances, those shall be shown in cross section.

3. A summary clearly describing subsurface conditions, soil type for WAC 296-155 part N, and groundwater conditions, sequencing considerations, and governing assumptions.

Where WAC 296-155 part N requires an engineer's design, the Contractor shall submit Type 2E Working Drawings. Required submittal elements include, at a minimum, the three items above and the following additional items:

4. Supporting calculations for the design of the excavation, the soil and material properties selected for design, and the justification for the selection for those properties, in accordance with the WSDOT *Geotechnical Design Manual* M 46-03.

5. Safety factors, or load and resistance factors used, and justification for their selection, in accordance with the WSDOT *Geotechnical Design Manual* M 46-03, and referenced AASHTO design manuals.

6. A monitoring plan to evaluate the excavation performance throughout its design life.

7. Any supplemental subsurface explorations made by the Contractor to meet the requirements for geotechnical design of excavation slopes, in accordance with the WSDOT *Geotechnical Design Manual* M 46-03.

2-09.3(3)D Shoring and Cofferdams

The first sentence of the sixth paragraph is revised to read:

Structural shoring and cofferdams shall be designed for conditions stated in this Section using methods shown in Division I Section 5 of the AASHTO *Standard Specifications for Highway Bridges* Seventeenth Edition – 2002 for allowable stress design, or the AASHTO *LRFD Bridge Design Specifications* for load and resistance factor design.

3-01.AP3

Section 3-01, Production from Quarry and Pit Sites
April 2, 2018

3-01.1 Description

The first paragraph is revised to read:

> This Work shall consist of manufacturing and producing crushed and screened aggregates including pit run aggregates of the kind, quality, and grading specified for use in the construction of concrete, hot mix asphalt, crushed surfacing, maintenance rock, ballast, gravel base, gravel backfill, gravel borrow, riprap, and bituminous surface treatments of all descriptions.

4-04.AP4

Section 4-04, Ballast and Crushed Surfacing
April 2, 2018

4-04.3(5) Shaping and Compaction

This section is supplemented with the following new paragraph:

> When using 100% Recycled Concrete Aggregate, the Contractor may submit a written request to use a test point evaluation for compaction acceptance testing in lieu of compacting to 95% of the standard density as determined by the requirements of Section 2-03.3(14)D. The test point evaluation shall be performed in accordance with SOP 738.

5-01.AP5

Section 5-01, Cement Concrete Pavement Rehabilitation
January 7, 2019

5-01.2 Materials

The reference for Concrete Patching Material is revised to read:

Concrete Patching Material, Grout, and Mortar	9-20.1

5-01.3(1)A1 Concrete Patching Materials

In this section, each reference to “9-20” is revised to read “9-20.1”.

5-01.3(4) Replace Cement Concrete Panel

This section’s content is deleted and replaced with the following new subsections:

5-01.3(4)A General

Curing, cold weather work, concrete pavement construction in adjacent lines, and protection of pavement shall meet the requirements of Section 5-05.3(13) through Section 5-05.3(15). The Contractor, at no cost to the Contracting Agency, shall repair any damage to existing pavement caused by the Contractor’s operations.

5-01.3(4)B Sawing and Dimensional Requirements

Concrete slabs to be replaced as shown in the Plans or staked by the Engineer shall be at least 6.0 feet long and full width of an existing pavement panel. The portion of the panel to remain in place shall have a minimum dimension of 6 feet in length and full

panel width; otherwise the entire panel shall be removed and replaced. There shall be no new joints closer than 3.0 feet to an existing transverse joint or crack. A vertical full depth saw cut is required along all longitudinal joints and at transverse locations and, unless the Engineer allows otherwise, an additional vertical full depth relief saw cut located 12 to 18 inches from and parallel to the initial longitudinal and transverse saw cut locations is also required. Removal of existing cement concrete pavement shall not cause damage to adjacent slabs that are to remain in place. In areas that will be ground, slab replacements shall be performed prior to pavement grinding.

Side forms shall meet the requirements of Section 5-05.3(7)B whenever a sawed full depth vertical face cannot be maintained.

5-01.3(4)C Dowel Bars and Tie Bars

For the half of a dowel bar or tie bar placed in fresh concrete, comply with the requirements of Section 5-05.

For the half of a dowel bar or tie bar placed in hardened concrete, comply with the Standard Plans and the following.

After drilling, secure dowel bars and tie bars into the existing pavement with either an epoxy bonding agent Type I or IV as specified in Section 9-26.1, or a grout Type 2 for non-shrink applications as specified in Section 9-20.3.

Dowel bars shall be placed at the mid depth of the concrete slab, centered over the transverse joint, and parallel to the centerline and to the roadway surface, within the tolerances in the table below. Dowel bars may be adjusted to avoid contact with existing dowel bars in the transverse joint at bridge approach slabs or existing panels provided the adjusted dowel bars meet the tolerances below.

Tie bars shall be placed at the mid depth of the concrete slab, centered over the joint, perpendicular to centerline, and parallel to the roadway surface, within the tolerances in the table below. The horizontal position of tie bars may be adjusted to avoid contact with existing tie bars in the longitudinal joint where panel replacement takes place, provided the adjusted tie bars meet the tolerances below.

Placement Tolerances		
	Dowel Bars	**Tie Bars**
Vertical: Center of Bar to Center of Slab Depth	± 1.00 inch max	± 1.00 inch max
Dowel Bar Centered Over the Transverse Joint	± 1.00 inch max	N/A
Tie Bar Centered Over the Longitudinal Joint	N/A	± 1.00 inch max
Parallel to Centerline Over the Length of the Dowel Bar	± 0.50 inch max	N/A
Perpendicular to Longitudinal Joint Over the Length of the Tie Bar	N/A	± 1.00 inch max
Parallel to Roadway Surface Over the Length of the Bar	± 0.50 inch max	± 1.00 inch max

Dowel bars and tie bars shall be placed according to the Standard Plan when multiple panels are placed. Panels shall be cast separately from the bridge approach slab.

Dowel bars to be drilled into existing concrete or at a new transverse contraction joint shall have a parting compound, such as curing compound, grease, or other Engineer accepted equal, applied to them prior to placement.

Clean the drilled holes in accordance with the epoxy or grout manufacturer's instructions. Holes shall be clean and dry at the time of placing the epoxy, or grout and tie bars. Completely fill the void between the tie bar and the outer limits of the drilled hole with epoxy or grout. Use retention rings to prevent leakage of the epoxy or grout and support the tie bar to prevent movement until the epoxy or grout has cured the minimum time recommended by the manufacturer.

5-01.3(4)D Foundation Preparation

The Contractor shall smooth the surfacing below the removed panel and compact it to the satisfaction of the Engineer. Crushed surfacing base course, or hot mix asphalt may be needed to bring the surfacing to grade prior to placing the new concrete.

If the material under the removed panel is uncompactable and the Engineer requires it, the Contractor shall excavate the Subgrade 2 feet, place a soil stabilization construction geotextile meeting the requirements of Section 9-33, and backfill with crushed surfacing base course. This Work may include:

1. Furnishing and hauling crushed surfacing base course to the project site.

2. Excavating uncompactable material.

3. Furnishing and placing a soil stabilization construction geotextile.

4. Backfilling and compacting crushed surfacing base course.

5. Removing, hauling and restocking any unused crushed surfacing base course.

5-01.3(4)E Concrete Finishing

Grade control shall be the responsibility of the Contractor.

All panels shall be struck off level with the adjacent panels and floated to a smooth surface.

Final finish texturing shall meet the requirements of Section 5-05.3(11).

In areas where the Plans do not require grinding, the surface smoothness will be measured with a 10-foot straightedge by the Engineer in accordance with Section 5-05.3(12). If the replacement panel is located in an area that will be ground as part of concrete pavement grinding in accordance with Section 5-01.3(9), the surface smoothness shall be measured, by the Contractor, in conjunction with the smoothness measurement done in accordance with Section 5-01.3(10).

5-01.3(4)F Joints

All transverse and longitudinal joints shall be sawed and sealed in accordance with Section 5-05.3(8). The Contractor may use a hand pushed single blade saw for sawing joints.

5-01.3(4)G Cracked Panels

Replacement panels that crack shall be repaired as specified in Section 5-05.3(22) at no cost to the Contracting Agency. When repairing replacement panels that have cracked, epoxy-coated dowel bars meeting the requirements of Section 9-07.5(1) may be substituted for the corrosion resistant dowel bars specified.

5-01.3(4)H Opening to Traffic

Opening to traffic shall meet the requirements of Section 5-05.3(17).

5-01.3(5) Partial Depth Spall Repair

The second sentence of the third paragraph is revised to read:

All sandblasting residue shall be removed.

5-01.3(7) Sealing Existing Concrete Random Cracks

The second sentence of the second paragraph is revised to read:

Immediately prior to sealing, the cracks shall be clean.

5-01.3(8) Sealing Existing Longitudinal and Transverse Joint

The first sentence of the fifth paragraph is revised to read:

Immediately prior to sealing, the cracks shall be clean.

5-01.3(10) Pavement Smoothness

This section is revised to read:

Pavement surface smoothness for cement concrete pavement grinding on this project will include International Roughness Index (IRI) testing. Ride quality will be evaluated using the Mean Roughness Index (MRI) calculated by averaging the IRI data for the left and right wheel path within the section.

Smoothness Testing Equipment and Operator Certification

Use an inertial profiler and operator that meet the requirements of Section 5-05.3(3)E.

Surface Smoothness

Operate the inertial profiler in accordance with AASHTO R 57. Collect two longitudinal traces, one in each wheel path. Collect the control profile at locations designated in Table 2 prior to any pavement rehabilitation Work on the areas to be tested. Collect an acceptance profile at locations designated in Table 2 after completion of all cement concrete pavement grinding on the project. Profiles shall be collected in a continuous pass including areas excluded from pay adjustments. Provide notice to the Engineer a minimum of seven calendar days prior to testing.

Table 2
Locations Requiring MRI Testing

Travel lanes where cement concrete grinding is shown in the plans	Control profile
Additional locations designated by the Engineer	Control profile
Travel lanes with completed cement	Acceptance profile

concrete pavement grinding	
Bridges, approach panels and 0.02 miles before and after bridges and approach panels and other excluded areas within lanes requiring testing	Control and acceptance profile
Ramps, Shoulders and Tapers	Do not test

Within 30 calendar days after the Contractor's testing, the Engineer may perform verification testing. If the verification testing shows a difference in MRI greater than the 10 percent, the following resolution process will be followed:

1. The profiles, equipment and procedures will be evaluated to determine the cause of the difference.

2. If the cause of the discrepancy cannot be resolved the pavement shall be retested with both profilers at a mutually agreed time. The two profilers will test the section within 30 minutes of each other. If the retest shows a difference in MRI equal or greater than the percentages shown in Table 2 of AASHTO R 54 the Engineer's test results will be used for pavement smoothness acceptance.

The Contractor shall evaluate profiles for acceptance or corrective action using the current version of ProVAL and provide the results including the profile data in unfiltered electronic Engineering Research Division (ERD) file format to the Engineer within 3 calendar days of completing each days profile testing. If the profile data files are created using an export option in the manufacturer's software where filter settings can be specified, use the filter settings that were used to create data files for certification.

Analyze the entire profile. Exclude areas listed in Table 3.

Table 3
Areas Excluded from MRI Acceptance Requirements

Location	Exclude
Beginning and end of grinding	Pavement within 0.02 mile
Bridges and approach slabs	The bridge and approach slab and 0.02 mile from the ends of the bridge or approach slab
Defects in the existing roadway identified by the Contractor that adversely affect the MRI such as dips, depressions and wheel path longitudinal joints.[1]	0.01-mile section containing the defect and the 0.01-mile section following the section with the defect.
[1]The presence of defects is subject to verification by the Engineer	

Report the MRI results in inches per mile for each 0.01-mile section and each 0.10-mile section. Do not truncate 0.10-mile sections for areas excluded from MRI acceptance requirements. MRI requirements will not apply to 0.10-mile sections with more than three 0.01 mile-sections excluded. MRI requirements for the individual 0.01-mile sections shall still apply. The Engineer will verify the analysis.

The MRI for each 0.10 mile of ground lane will comply with the following:

Control Profile MRI per 0.10 Mile	Maximum MRI of Acceptance Profile per 0.10 Mile
≤130 inches/mile	78 inches/mile
>130 inches/mile	0.6 x Control Profile MRI

The MRI for each 0.01 mile of the completed cement concrete grinding shall not exceed 160 inches/mile.

All Work is subject to parallel and transverse 10-foot straightedge requirements, corrective work and disincentive adjustments.

Surface smoothness of travel lanes including areas subject to MRI testing shall not vary more than ⅛ inch from the lower edge of a 10-foot straightedge placed on the surface parallel to the centerline.

The smoothness perpendicular to the centerline will be measured with a 10-foot straightedge within the lanes. There shall be not vertical elevation difference of more than a ¼ inch between lanes.

Pavement that does not meet these requirements will be subject to corrective Work. All corrective Work shall be completed at no additional expense, including traffic control, to the Contracting Agency. Pavement shall be repaired by one or more of the following methods:

1. Diamond grinding.

2. By other method accepted by the Engineer.

Repair areas shall be re-profiled to ensure they no longer require corrective Work. With concurrence of the Engineer, a 10-foot straight edge may be used in place of the inertial profiler.

If correction of the roadway as listed above either will not or does not produce satisfactory results as to smoothness or serviceability the Engineer may accept the completed pavement and a credit will be calculated in accordance with Section 5-01.5. Under these circumstances, the decision whether to accept the completed pavement or to require corrective work as described above shall be vested entirely in the Engineer.

5-01.5 Payment

This section is supplemented with the following:

"Grinding Smoothness Compliance Adjustment", by calculation.
Grinding Smoothness Compliance Adjustments will be based on the requirements in Section 5-01.3(10) and the following calculations:

A smoothness compliance adjustment will be calculated in the sum of minus $100 for each and every section of single traffic lane 0.01 mile in length and $1,000 for each and every section of single traffic lane 0.10 mile in length that does not meet the requirements in Section 5-01.3(10) after corrective Work.

5-02.AP5

Section 5-02, Bituminous Surface Treatment
April 1, 2019

5-02.3(5) Application of Aggregates

The first sentence of the eleventh paragraph is revised to read:

> The Contractor shall use a pickup broom in all curbed areas, on all bridges, within city limits, within sensitive areas, and where shown in the Plans both before the application of emulsified asphalt and during the final brooming operation.

5-04.AP5

Section 5-04, Hot Mix Asphalt
April 1, 2019

5-04.1 Description

The last sentence of the first paragraph is revised to read:

> The manufacture of HMA may include additives or processes that reduce the optimum mixing temperature (Warm Mix Asphalt) or serve as a compaction aid in accordance with these Specifications.

5-04.2 Materials

The reference to “Warm Mix Asphalt Additive” is revised to read “HMA Additive”.

5-04.2(1) How to Get an HMA Mix Design on the QPL

The last bullet in the first paragraph is revised to read:

- Do not include HMA additives that reduce the optimum mixing temperature or serve as a compaction aid when developing a mix design or submitting a mix design for QPL evaluation. The use of HMA additives is not part of the process for obtaining approval for listing a mix design on the QPL. Refer to Section 5-04.2(2)B.

In the table, “WSDOT Standard Practice QC-8” is revised to read “WSDOT Standard Practice QC-8 located in the WSDOT Materials Manual M 46-01”.

5-04.2(1)C Mix Design Resubmittal for QPL Approval

Item number 3 of the first paragraph is revised to read:

3. Changes in modifiers used in the asphalt binder.

5-04.2(2)B Using Warm Mix Asphalt Processes

This section, including title, is revised to read:

5-04.2(2)B Using HMA Additives

The Contractor may, at the Contractor’s discretion, elect to use additives that reduce the optimum mixing temperature or serve as a compaction aid for producing HMA. Additives include organic additives, chemical additives and foaming processes. The use of Additives is subject to the following:

- Do not use additives that reduce the mixing temperature in accordance with Section 5-04.3(6) in the production of High RAP/Any RAS mixtures.

- Before using additives, obtain the Engineer's approval using WSDOT Form 350-076 to describe the proposed additive and process.

5-04.3(3)A Mixing Plant

Item number 5 of the first paragraph is revised to read:

5. Provide HMA sampling equipment that complies with FOP for AASHTO T 168:

   - Use a mechanical sampling device accepted by the Engineer, or

   - Platforms or devices to enable sampling from the truck transport without entering the truck transport for sampling HMA.

5-04.3(4) Preparation of Existing Paved Surfaces

The first sentence of the fourth paragraph is revised to read:

Unless otherwise allowed by the Engineer, use cationic emulsified asphalt CSS-1, CSS-1h, or Performance Graded (PG) asphalt for tack coat.

5-04.3(6) Mixing

The first paragraph is revised to read:

The asphalt supplier shall introduce recycling agent and anti-stripping additive, in the amount designated on the QPL for the mix design, into the asphalt binder prior to shipment to the asphalt mixing plant.

The seventh paragraph is revised to read:

Upon discharge from the mixer, ensure that the temperature of the HMA does not exceed the optimum mixing temperature shown on the accepted Mix Design Report by more than 25°F, or as allowed by the Engineer. When an additive is included in the manufacture of HMA, do not heat the additive (at any stage of production including in binder storage tanks) to a temperature higher than the maximum recommended by the manufacturer of the additive.

5-04.3(7) Spreading and Finishing

The last row of the table is revised to read:

⅜ inch	0.25 feet	0.30 feet

5-04.3(8) Aggregate Acceptance Prior to Incorporation in HMA

The following new paragraph is inserted after the first paragraph:

The Contracting Agency's combined aggregate bulk specific gravity (Gsb) blend as shown on the HMA Mix Design will be used for VMA calculations until the Contractor submits a written request for a Gsb test. The new Gsb will be used in the VMA calculations for HMA from the date the Engineer receives the written request for a Gsb retest. The Contractor may request aggregate specific gravity (Gsb) testing be performed by the Contracting Agency twice per project. The Gsb blend of the combined

stockpiles will be used to calculate voids in mineral aggregate (VMA) of any HMA produced after the new Gsb is determined.

5-04.3(9)A1 Test Section – When Required, When to Stop

The following new row is inserted after the second row in Table 9:

VMA	Minimum PF_i of 0.95 based on the criteria in Section 5-04.3(9)B4[2]	None[4]

5-04.3(9)A2 Test Section – Evaluating the HMA Mixture in a Test Section

In Table 9a, the test property "Gradation, Asphalt Binder, and V_a" is revised to read "Gradation, Asphalt Binder, VMA, and V_a"

In Table 9a, the first column of the third row is revised to read:

Aggregates: Sand Equivalent Uncompacted Void Content Fracture

5-04.3(9)B3 Mixture Statistical Evaluation – Acceptance Testing

In Table 11, "V_a" is revised to read "VMA and V_a"

5-04.3(9)B5 Mixture Statistical Evaluation – Composite Pay Factors (CPF)

The following new row is inserted above the last row in Table 12:

Voids in Mineral Aggregate (VMA)	2

5-04.3(9)B7 Mixture Statistical Evaluation – Retests

The second to last sentence is revised to read:

The sample will be tested for a complete gradation analysis, asphalt binder content, VMA and V_a, and the results of the retest will be used for the acceptance of the HMA mixture in place of the original mixture sublot sample test results.

5-04.3(10)A HMA Compaction – General Compaction Requirements

The last paragraph is revised to read:

On bridge decks and on roadway approaches within five feet of a bridge/back of pavement seat, rollers shall not be operated in a vibratory mode, defined as a mode in which the drum vibrates vertically. However, unless otherwise noted on the plans, rollers may be operated in an oscillatory mode, defined as a mode in which the drum vibrates in the horizontal direction only.

5-04.3(10)C1 HMA Compaction Statistical Evaluation – Lots and Sublots

The bulleted item in the fourth paragraph is revised to read:

- For a compaction lot in progress with a compaction CPF less than 0.75 using an LSL = 91.5, a new compaction lot will begin at the Contractor's request after the

Engineer is satisfied that material conforming to the Specifications can be produced. See also Section 5-04.3(11)F.

5-04.3(10)C2 HMA Compaction Statistical Evaluation – Acceptance Testing

In the table, “WSDOT FOP for AASHTO T 355” is revised to read “FOP for AASHTO T 355”.

5-04.3(10)C3 HMA Statistical Compaction – Price Adjustments

In the first paragraph, “WSDOT FOP for AASHTO T 355” is revised to read “FOP for AASHTO T 355”.

The first sentence in the second paragraph is revised to read:

For each HMA compaction lot (that is accepted by Statistical Evaluation) which does not meet the criteria in the preceding paragraph, the compaction lot shall be evaluated in accordance with Section 1-06.2(2)D5 to determine the appropriate Composite Pay Factor (CPF).

The last two paragraphs are revised to read:

Determine the Compaction Price Adjustment (CPA) from the table below, selecting the equation for CPA that corresponds to the value of CPF determined above.

Calculating HMA Compaction Price Adjustment (CPA)	
Value of CPF	**Equation for Calculating CPA**
When CPF > 1.00	CPA = [1.00 x (CPF – 1.00)] x Q x UP
When CPF = 1.00	CPA = $0
When CPF < 1.0	CPA = [0.60 x (CPF – 1.00)] x Q x UP

Where
CPA = Compaction Price Adjustment for the compaction lot ($)
CPF = Composite Pay Factor for the compaction lot (maximum is 1.05)
Q = Quantity in the compaction lot (tons)
UP = Unit price of the HMA in the compaction lot ($/ton)

5-04.3(10)C4 HMA Statistical Compaction – Requests for Retesting

The first sentence is revised to read:

For a compaction sublot that has been tested with a nuclear density gauge that did not meet the minimum of 91.5 percent of the theoretical maximum density in a compaction lot with a CPF below 1.00 and thus subject to a price reduction or rejection, the Contractor may request that a core, taken at the same location as the nuclear density test, be used for determination of the relative density of the compaction sublot.

5-04.3(13) Surface Smoothness

The second to last paragraph is revised to read:

When concrete pavement is to be placed on HMA, the surface tolerance of the HMA shall be such that no surface elevation lies above the Plan grade minus the specified Plan depth of concrete pavement. Prior to placing the concrete pavement, bring any

such irregularities to the required tolerance by grinding or other means allowed by the Engineer.

5-04.5 Payment

The paragraph following the Bid item “Crack Sealing-LF”, per linear foot is revised to read:

The unit Contract price per linear foot for “Crack Sealing-LF” shall be full payment for all costs incurred to perform the Work described in Section 5-04.3(4)A.

5-05.AP5

Section 5-05, Cement Concrete Pavement
April 1, 2019

5-05.1 Description

In the first paragraph, “portland cement concrete” is revised to read “cement concrete”.

5-05.2 Materials

In the first paragraph, the reference to “Portland Cement” is revised to read:

Cement 9-01

In the first paragraph, the section reference for Concrete Patching Material is revised to read “9-20.1”.

The second paragraph is revised to read:

Cementitious materials are considered to be the following: portland cement, blended hydraulic cement, fly ash, ground granulated blast furnace slag and microsilica fume.

5-05.3(1) Concrete Mix Design for Paving

The table title in item number 4 is revised to read **Concrete Batch Weights**.

In item 4a, “Portland Cement” is revised to read “Cement”.

5-05.3(3)E Smoothness Testing Equipment

This section is revised to read:

Inertial profilers shall meet all requirements of AASHTO M 328 and be certified in accordance with AASHTO R 56 within the preceding 12 months.

The inertial profiler operator shall be certified as required by AASHTO R 56 within three years preceding profile measurement.

Equipment or operator certification by other states or a profiler certification facility will be accepted provided the certification meets the requirements of AASHTO R 56. Documentation verifying certification by another state shall be submitted to the Engineer a minimum of 14 calendar days prior to profile measurement. Equipment certification documentation shall include the information required by part 8.5 and 8.6 of AASHTO R 56. Operator documentation shall include a statement from the certifying state that indicates the operator is certified to operate the inertial profiler to be used on the project. The decision whether another state’s certification meets the requirements of AASHTO R 56 shall be vested entirely in the Engineer.

5-05.3(4) Measuring and Batching Materials

Item number 2 is revised to read:

2. **Batching Materials** – On all projects requiring more than 2,500 cubic yards of concrete for paving, the batching plant shall be equipped to proportion aggregates and cement by weight by means of automatic and interlocked proportioning devices of accepted type.

5-05.3(4)A Acceptance of Portland Cement Concrete Pavement

This section's title is revised to read:

Acceptance of Portland Cement or Blended Hydraulic Cement Concrete Pavement

The first sentence is revised to read:

Acceptance of portland cement or blended hydraulic cement concrete pavement shall be as provided under statistical or nonstatistical acceptance.

5-05.3(7) Placing, Spreading, and Compacting Concrete

This section's content is deleted.

5-05.3(10) Tie Bars and Corrosion Resistant Dowel Bars

The first sentence of the last paragraph is revised to read:

The tie bar holes shall be clean before grouting.

5-05.3(12) Surface Smoothness

This section is revised to read:

Pavement surface smoothness for this project will include International Roughness Index (IRI) testing. The Contractor shall perform IRI testing on each through lane, climbing lane, and passing lane, greater than 0.25 mile in length and these lanes will be subject to incentive/disincentive adjustments. Ride quality will be evaluated using the Mean Roughness Index (MRI) calculated by averaging the IRI data for the left and right wheel path within the section.

Ramps, shoulders and tapers will not be included in MRI testing for pavement smoothness and will not be subject to incentive adjustments. All Work is subject to parallel and transverse 10-foot straightedge requirements, corrective work and disincentive adjustments.

Operate the inertial profiler in accordance with AASHTO R 57. Collect two longitudinal traces, one in each wheel path. Collect profile data after completion of all concrete paving on the project in a continuous pass including areas excluded from pay adjustments. Provide notice to the Engineer a minimum of seven calendar days prior to testing.

Within 30 calendar days after the Contractor's testing, the Engineer may perform verification testing. If the verification testing shows a difference in MRI greater than the percentages shown in Table 2 of AASHTO R 54 the following resolution process will be followed:

1. The profiles, equipment and procedures will be evaluated to determine the cause of the difference.

2. If the cause of the discrepancy cannot be resolved the pavement shall be retested with both profilers at a mutually agreed time. The two profilers will test the section within 30 minutes of each other. If the retest shows a difference in MRI equal or greater than the percentages shown in Table 2 of AASHTO R 54 the Engineer's test results will be used to establish pay adjustments.

Surface smoothness of travel lanes not subject to MRI testing will be measured with a 10-foot straightedge no later than 5:00 p.m. of the day following the placing of the concrete. The completed surface of the wearing course shall not vary more than ⅛ inch from the lower edge of a 10-foot straightedge placed on the surface parallel to the centerline.

Smoothness perpendicular to the centerline will be measured with a 10-foot straightedge across all lanes with the same cross slope, including shoulders when composed of cement concrete pavement. The overlapping 10-foot straightedge measurement shall be discontinued at a point 6 inches from the most extreme outside edge of the finished cement concrete pavement. The completed surface of the wearing course shall not vary more than ¼ inch from the lower edge of a 10-foot straightedge placed on the surface perpendicular to the centerline. Any deviations in excess of the above tolerances shall be corrected.

The Contractor shall evaluate profiles for acceptance, incentive payments, disincentive payments, or corrective action using the current version of ProVAL and provide the results including the profile data in unfiltered electronic Engineering Research Division (ERD) file format to the Engineer within 2 calendar days of completing testing each section of pavement. If the profile data files are created using an export option in the manufacturer's software where filter settings can be specified, use the filter settings that were used to create data files for certification. Analyze the entire profile. Exclude any areas specifically identified in the Contract. Exclude from the analysis the first 100 feet after the start of the paving operations and last 100 feet prior to the end of the paving operation, the first 100 feet on either side of bridge Structures and bridge approach slab. Report the MRI results in inches per mile for each 52.8 foot section and horizontal distance measurements in project stationing to the nearest foot. Include pay adjustments in the results. The Engineer will verify the analysis.

Corrective work for pavement smoothness may be taken by the Contractor prior to MRI testing. After completion of the MRI testing the Contractor shall measure the smoothness of each 52.8-foot section with an MRI greater than 125 inches per mile with a 10-foot straightedge within 14 calendar days or as allowed by the Engineer. The Contractor shall identify all locations that require corrective work and provide the straight edge measurements at each location that exceeds the allowable limit to the Engineer. If all measurements in a 52.8-foot section comply with smoothness requirements, the Contractor shall provide the maximum measurement to the Engineer and a statement that corrective work is not required. Unless allowed by the Engineer, corrective work shall be taken by the Contractor for pavement identified by the Contractor or Engineer that does not meet the following requirements:

1. The completed surface shall be of uniform texture, smooth, uniform as to crown and grade, and free from defects of all kinds.

2. The completed surface shall not vary more than ⅛ inch from the lower edge of a 10-foot straightedge placed on the surface parallel to the centerline.

3. The completed surface shall vary not more than ¼ inch in 10 feet from the rate of transverse slope shown in the Plans.

All corrective work shall be completed at no additional expense, including traffic control, to the Contracting Agency. Corrective work shall not begin until the concrete has reached its design strength unless allowed by the Engineer. Pavement shall be repaired by one or more of the following methods:

1. Diamond grinding; repairs shall not reduce pavement thickness by more than ¼ inch less than the thickness shown in the Plans. When required by the Engineer, the Contractor shall verify the thickness of the concrete pavement by coring. Thickness reduction due to corrective work will not be included in thickness measurements for calculating the Thickness Deficiency in Section 5-05.5(1)A.

2. Removal and replacement of the cement concrete pavement.

3. By other method allowed by the Engineer.

For repairs following MRI testing the repaired area shall be checked by the Contractor with a 10-foot straightedge to ensure it no longer requires corrective work. With concurrence of the Engineer an inertial profiler may be used in place of the 10-foot straight edge.

If correction of the roadway as listed above either will not or does not produce satisfactory results as to smoothness or serviceability the Engineer may accept the completed pavement and a credit will be calculated in accordance with Section 5-05.5. The credit will be in addition to the price adjustment for MRI. Under these circumstances, the decision whether to accept the completed pavement or to require corrective work as described above shall be vested entirely in the Engineer.

5-05.3(22) Repair of Defective Pavement Slabs

The last sentence of the fourth paragraph is revised to read:

All sandblasting residue shall be removed.

5-05.4 Measurement

Item number 3 of the second paragraph is revised to read:

3. The depth shall be determined in accordance with Section 5-05.5(1). The depth utilized to calculate the volume shall not exceed the Plan depth plus 0.04 feet.

The third paragraph is revised to read:

The volume of cement concrete pavement in each thickness lot shall equal the measured length × width × thickness measurement.

The last paragraph is revised to read:

The calculation for cement concrete compliance adjustment is the volume of concrete represented by the CPF and the Thickness deficiency adjustment.

5-05.5 Payment

The paragraph following the Bid item “Cement Conc. Pavement”, per cubic yard is supplemented with the following:

All costs associated with performing the magnetic pulse induction thickness testing shall be included in the unit Contract price per cubic yard for “Cement Conc. Pavement”.

The Bid item “Ride Smoothness Compliance Adjustment”, by calculation, and the paragraph following this bid item are revised to read:

“Ride Smoothness Compliance Adjustment”, by calculation.

Smoothness Compliance Adjustments will be based on the requirements in Section 5-05.3(12) and the following calculations:

1. Final MRI acceptance and incentive/disincentive payments for pavement smoothness will be calculated as the average of the ten 52.8-foot sections in each 528 feet in accordance with the price adjustment schedule.

    a. For sections of a lane that are a minimum of 52.8 feet and less than 528 feet, the price adjustment will be calculated using the average of the 52.8 foot MRI values and the price adjustment prorated for the length of the section.

    b. MRI values per 52.8-feet that were measured prior to corrective work will be included in the 528 foot price adjustment for sections with corrective work.

2. In addition to the price adjustment for MRI a smoothness compliance adjustment will be calculated in the sum of minus $1000.00 for each and every section of single traffic lane 52.8 feet in length in that does not meet the 10-foot straight edge requirements in Section 5-05.3(12) after corrective Work.

Price Adjustment Schedule

MRI for each 528 ft. section	Pay Adjustment Schedule
in. / mi.	**$ / 0.10 mi.**
< 30	2400
30	2400
31	2320
32	2240
33	2160
34	2080
35	2000
36	1920
37	1840

38	1760
39	1680
40	1600
41	1520
42	1440
43	1360
44	1280
45	1200
46	1120
47	1040
48	960
49	880
50	800
51	720
52	640
53	560
54	480
55	400
56	320
57	240
58	160
59	80
60	0
61	0
62	0
63	0
64	0
65	0
66	0
67	0
68	0
69	0
70	0
71	0
72	0
73	0
74	0
75	0
76	-80
77	-160
78	-240
79	-320
80	-400
81	-480
82	-560
83	-640
84	-720
85	-800
86	-880
87	-960

88	-1040
89	-1120
90	-1200
91	-1280
92	-1360
93	-1440
94	-1520
95	-1600
96	-1680
97	-1760
98	-1840
99	-1920
100	-2000
101	-2080
102	-2160
103	-2240
104	-2320
105	-2400
106	-2480
107	-2560
108	-2640
109	-2720
110	-2800
111	-2880
112	-2960
113	-3040
114	-3120
115	-3200
116	-3280
117	-3360
118	-3440
119	-3520
120	-3600
121	-3680
122	-3760
123	-3840
124	-3920
≥125	-4000

The bid item “Portland Cement Concrete Compliance Adjustment”, by calculation, and the paragraph following this bid item are revised to read:

“Cement Concrete Compliance Adjustment”, by calculation.

Payment for “Cement Concrete Compliance Adjustment” will be calculated by multiplying the unit Contract price for the cement concrete pavement, times the volume for adjustment, times the percent of adjustment determined from the calculated CPF and the Deficiency Adjustment listed in Section 5-05.5(1)A.

5-05.5(1) Pavement Thickness

This section is revised to read:

Cement concrete pavement shall be constructed in accordance with the thickness requirements in the Plans and Specifications. Tolerances allowed for Subgrade construction and other provisions, which may affect thickness, shall not be construed to modify such thickness requirements.

Thickness measurements in each lane paved shall comply with the following:

Thickness Testing of Cement Concrete Pavement	
Thickness Lot Size	15 panels maximum
Thickness test location determined by	Engineer will select testing locations in accordance with WSDOT TM 716 method B.
Sample method	AASHTO T 359
Sample preparation performed by	Contractor provides, places, and secures disks in the presence of the Engineer[1]
Measurement method	AASHTO T 359
Thickness measurement performed by	Contractor, in the presence of the Engineer[2]
[1]Reflectors shall be located at within 0.5 feet of the center of the panel. The Contractor shall supply a sufficient number of 300 mm-diameter round reflectors meeting the requirements of AASHTO T 359 to accomplish the required testing. [2]The Contractor shall provide all equipment and materials needed to perform the testing.	

Thickness measurements shall be rounded to the nearest 0.01 foot.

Each thickness test location where the pavement thickness is deficient by more than 0.04 foot, shall be subject to price reduction or corrective action as shown in Table 2.

Table 2 Thickness Deficiency	
0.04' < Thickness Deficiency ≤ 0.06'	10
0.06' < Thickness deficiency ≤ 0.08'	25
Thickness deficiency > 0.08'	Remove and replace the panels or the panels may be accepted with no payment at the discretion of the Engineer.

The price reduction shall be computed by multiplying the percent price reduction in Table 2 by the unit Contract price by the volume of pavement represented by the thickness test lot.

Additional cores may be taken by the Contractor to determine the limits of an area that has a thickness deficiency greater than 0.04 feet. Cores shall be taken at the approximate center of the panel. Only the panels within the limits of the deficiency area as determined by the cores will be subject to a price reduction or corrective action. The cores shall be taken in the presence of the Engineer and delivered to the Engineer for measurement. All costs for the additional cores including filling the core holes with patching material meeting the requirements of Section 9-20 will be the responsibility of the Contractor.

5-05.5(1)A Thickness Deficiency of 0.05 Foot or Less

This section, including title, is revised to read:

5-05.5(1)A Vacant

5-05.5(1)B Thickness Deficiency of More Than 0.05 Foot

This section, including title, is revised to read:

5-05.5(1)B Vacant

6-01.AP6

Section 6-01, General Requirements for Structures
January 7, 2019

This section is supplemented with the following new subsections:

6-01.16 Repair of Defective Work

6-01.16(1) General

When using repair procedures that are described elsewhere in the Contract Documents, the Working Drawing submittal requirements of this Section shall not apply to those repairs unless noted otherwise.

Repair procedures for defective Work shall be submitted as Type 2 Working Drawings. Type 2E Working Drawings shall be submitted when required by the Engineer. As an alternative to submitting Type 2 or 2E Working Drawings, defective Work within the limits of applicability of a pre-approved repair procedure may be repaired using that procedure. Repairs using a pre-approved repair procedure shall be submitted as a Type 1 Working Drawing.

Pre-approved repair procedures shall consist of the following:

- The procedures listed in Section 6-01.16(2)
- For precast concrete, repair procedures in the annual plant approval process documents that have been approved for use by the Contracting Agency.

All Working Drawings for repair procedures shall include:

- A description of the defective Work including location, extent and pictures
- Materials to be used in the repair. Repairs using manufactured products shall include written manufacturer recommendations for intended uses of the product, surface preparation, mixing, aggregate extension (if applicable), ambient and surface temperature limits, placement methods, finishing and curing.
- Construction procedures
- Plan details of the area to be repaired
- Calculations for Type 2E Working Drawings

Material manufacturer's instructions and recommendations shall supersede any conflicting requirements in pre-approved repair procedures.

The Engineer shall be notified prior to performing any repair procedure and shall be given an opportunity to inspect the repair work being performed.

6-01.16(2) Pre-Approved Repair Procedures

6-01.16(2)A Concrete Spalls and Poor Consolidation (Rock Pockets, Honeycombs, Voids, etc.)

This repair shall be limited to the following areas:

- Areas that are not on top Roadway surfaces (with or without an overlay) including but not limited to concrete bridge decks, bridge approach slabs or cement concrete pavement

- Areas that are not underwater

- Areas that are not on precast barrier, except for the bottom 4 inches (but not to exceed 1 inch above blockouts)

- Areas that do not affect structural adequacy as determined by the Engineer.

The repair procedure is as follows:

1. Remove all loose and unsound concrete. Impact breakers shall not exceed 15 pounds in weight when removing concrete adjacent to reinforcement or other embedments and shall not exceed 30 pounds in weight otherwise. Operate impact breakers at angles less than 45 degrees as measured from the surface of the concrete to the tool and moving away from the edge of the defective Work. Concrete shall be completely removed from exposed surfaces of existing steel reinforcing bars. If half or more of the circumference of any steel reinforcing bar is exposed, if the reinforcing bar is loose or if the bond to existing concrete is poor then concrete shall be removed at least ¾ inch behind the reinforcing bar. Do not damage any existing reinforcement. Stop work and allow the Engineer to inspect the repair area after removing all loose and unsound concrete. Submit a modified repair procedure when required by the Engineer.

2. Square the edges of the repair area by cutting an edge perpendicular to the concrete surface around the repair area. The geometry of the repair perimeter shall minimize the edge length and shall be rectangular with perpendicular edges, avoiding reentrant corners. The depth of the cut shall be a minimum of ¾ inch, but shall be reduced if necessary to avoid damaging any reinforcement. For repairs on vertical surfaces, the top edge shall slope up toward the front at a 1-vertical-to-3-horizontal slope.

3. Remove concrete within the repair area to a depth at least matching the cut depth at the edges. Large variations in the depth of removal within short distances shall be avoided. Roughen the concrete surface. The concrete surface should be roughened to at least Concrete Surface Profile (CSP) 5 in accordance with ICRI Guideline

No. 310.2R, unless a different CSP is recommended by the patching material manufacturer.

4. Inspect the concrete repair surface for delaminations, debonding, microcracking and voids using hammer tapping or a chain drag. Remove any additional loose or unsound concrete in accordance with steps 1 through 3.

5. Select a patching material in accordance with Section 9-20.2 that is appropriate for the repair location and thickness. The concrete patching material shall be pumpable or self-consolidating as required for the type of placement that suits the repair. The patching material shall have a minimum compressive strength at least equal to the specified compressive strength of the concrete.

6. Prepare the concrete surface and reinforcing steel in accordance with the patching material manufacturer's recommendations. At a minimum, clean the concrete surfaces (including perimeter edges) and reinforcing steel using oil-free abrasive blasting or high-pressure (minimum 5,000 psi) water blasting. All dirt, dust, loose particles, rust, laitance, oil, film, microcracked/bruised concrete or foreign material of any sort shall be removed. Damage to the epoxy coating on steel reinforcing bars shall be repaired in accordance with Section 6-02.3(24)H.

7. Construct forms if necessary, such as for patching vertical or overhead surfaces or where patching extends to the edge or corner of a placement.

8. When recommended by the patching material manufacturer, saturate the concrete in the repair area and remove any free water at the concrete surface to obtain a saturated surface dry (SSD) substrate. When recommended by the patching material manufacturer, apply a primer, scrub coat or bonding agent to the existing surfaces. Epoxy bonding agents, if used, shall be Type II or Type V in accordance with Section 9-26.1.

9. Place and consolidate the patching material in accordance with the manufacturer's recommendations. Work the material firmly into all surfaces of the repair area with sufficient pressure to achieve proper bond to the concrete.

10. The patching material shall be textured, cured and finished in accordance with the patching material manufacturer's recommendations and/or the requirements for the repaired component. Protect the newly placed patch from vibration in accordance with Section 6-02.3(6)D.

11. When the completed repair does not match the existing concrete color and will be visible to the public, a sand and cement mixture that is color matched to the existing concrete shall be rubbed, brushed, or applied to the surface of the patching material and the concrete.

6-01.10 Utilities Supported by or Attached to Bridges

In the third paragraph, “Federal Standard 595” is revised to read “SAE AMS Standard 595”.

6-01.12 Final Cleanup

The second sentence of the first paragraph is revised to read:

> Structure decks shall be clean.

The second paragraph is deleted.

6-02.AP6

Section 6-02, Concrete Structures
April 1, 2019

6-02.1 Description

The first sentence is revised to read:

> This Work consists of the construction of all Structures (and their parts) made of portland cement or blended hydraulic cement concrete with or without reinforcement, including bridge approach slabs.

6-02.2 Materials

In the first paragraph, the references to “Portland Cement” and “Aggregates for Portland Cement Concrete” are revised to read:

Cement	9-01
Aggregates for Concrete	9-03.1

The reference to metakaolin is deleted.

6-02.3(2) Proportioning Materials

The second paragraph is revised to read:

> Unless otherwise specified, the Contractor shall use Type I or II portland cement or blended hydraulic cement in all concrete as defined in Section 9-01.2(1).

The last sentence of the fifth paragraph is revised to read:

> With the Engineer’s written concurrence, microsilica fume may be used in all classifications of Class 4000, Class 3000, and commercial concrete and is limited to a maximum of 10 percent of the cementitious material.

6-02.3(2)A Contractor Mix Design

The last sentence of the last paragraph is revised to read:

> For all other concrete, air content shall be a minimum of 4.5 percent and a maximum of 7.5 percent for all concrete placed above the finished ground line unless noted otherwise.

6-02.3(2)A1 Contractor Mix Design for Concrete Class 4000D

Item number 5 of the first paragraph is deleted.

Item number 6 of the first paragraph (after the preceding Amendment is applied) is renumbered to 5.

6-02.3(2)B Commercial Concrete

The second paragraph is revised to read:

> Where concrete Class 3000 is specified for items such as, culvert headwalls, plugging culverts, concrete pipe collars, pipe anchors, monument cases, Type PPB, PS, I, FB and RM signal standards, pedestals, cabinet bases, guardrail anchors, fence post footings, sidewalks, concrete curbs, curbs and gutters, and gutters, the Contractor may use commercial concrete. If commercial concrete is used for sidewalks, concrete curbs, curbs and gutters, and gutters, it shall have a minimum cementitious material content of 564 pounds per cubic yard of concrete, shall be air entrained, and the tolerances of Section 6-02.3(5)C shall apply.

6-02.3(4) Ready-Mix Concrete

The first sentence of the first paragraph is revised to read:

> All concrete, except lean concrete, shall be batched in a prequalified manual, semi-automatic, or automatic plant as described in Section 6-02.3(4)A.

6-02.3(4)D Temperature and Time For Placement

The following is inserted after the first sentence of the first paragraph:

> The upper temperature limit for placement for Class 4000D concrete may be increased to a maximum of 80°F if allowed by the Engineer.

6-02.3(5)C Conformance to Mix Design

Item number 1 of the second paragraph is revised to read:

> 1. Cement weight plus 5 percent or minus 1 percent of that specified in the mix design.

6-02.3(6)A1 Hot Weather Protection

The first paragraph is revised to read:

> The Contractor shall provide concrete within the specified temperature limits. Cooling of the coarse aggregate piles by sprinkling with water is permitted provided the moisture content is monitored, the mixing water is adjusted for the free water in the aggregate and the coarse aggregate is removed from at least 1 foot above the bottom of the pile. Sprinkling of fine aggregate piles with water is not allowed. Refrigerating mixing water or replacing all or part of the mixing water with crushed ice is permitted, provided the ice is completely melted by placing time.

The second sentence of the second paragraph is revised to read:

> These surfaces include forms, reinforcing steel, steel beam flanges, and any others that touch the concrete.

6-02.3(7) Vacant

This section, including title, is revised to read:

6-02.3(7) Tolerances

Unless noted otherwise, concrete construction tolerances shall be in accordance with this section. Tolerances in this section do not apply to cement concrete pavement.

Horizontal deviation of roadway crown points, cross-slope break points, and curb, barrier or railing edges from alignment or work line: ±1.0 inch

Deviation from plane: ±0.5 inch in 10 feet

Deviation from plane for roadway surfaces: ±0.25 inch in 10 feet

Deviation from plumb or specified batter: ±0.5 inch in 10 feet, but not to exceed a total of ±1.5 inches

Vertical deviation from profile grade for roadway surfaces: ±1 inch

Vertical deviation of top surfaces (except roadway surfaces): ±0.75 inch

Thickness of bridge decks and other structural slabs not at grade: ±0.25 inch

Length, width and thickness of elements such as columns, beams, crossbeams, diaphragms, corbels, piers, abutments and walls, including dimensions to construction joints in initial placements: +0.5 inch, -0.25 inch

Length, width and thickness of spread footing foundations: +2 inches, -0.5 inch

Horizontal location of the as-placed edge of spread footing foundations: The greater of ±2% of the horizontal dimension of the foundation perpendicular to the edge and ±0.5 inch. However, the tolerance shall not exceed ±2 inches.

Location of opening, insert or embedded item at concrete surface: ±0.5 inch

Cross-sectional dimensions of opening: ±0.5 inch

Bridge deck, bridge approach slab, and bridge traffic barrier expansion joint gaps with a specified temperature range, measured at a stable temperature: ±0.25 inch

Horizontal deviation of centerline of bearing pad, oak block or other bearing assembly: ±0.125 inch

Horizontal deviation of centerline of supported element from centerline of bearing pad, oak block or other bearing assembly ±0.25 inch

Vertical deviation of top of bearing pad, oak block or other bearing assembly: ±0.125 inch

6-02.3(10)C Finishing Equipment

The first paragraph is revised to read:

The finishing machine shall be self-propelled and be capable of forward and reverse movement under positive control. The finishing machine shall be equipped with augers and a rotating cylindrical single or double drum screed. The finishing machine shall have the necessary adjustments to produce the required cross section, line, and grade. The finishing machine shall be capable of raising the screeds, augers, and any other parts of the finishing mechanical operation to clear the screeded surface, and returning to the specified grade under positive control. Unless otherwise allowed by the Engineer, a finishing machine manufacturer technical representative shall be on site to assist the first use of the machine on the Contract.

The first sentence of the second paragraph is revised to read:

For bridge deck widening of 20 feet or less, and for bridge approach slabs, or where jobsite conditions do not allow the use of the conventional configuration finishing machines, or modified conventional machines as described above; the Contractor may submit a Type 2 Working Drawing proposing the use of a hand-operated motorized power screed such as a “Texas” or “Bunyan” screed.

6-02.3(10)D4 Monitoring Bridge Deck Concrete Temperature After Placement

This section, including title, is revised to read:

6-02.3(10)D4 Vacant

6-02.3(10)D5 Bridge Deck Concrete Finishing and Texturing

In the third subparagraph of the first paragraph, the last sentence is revised to read:

The Contractor shall texture the bridge deck surface to within 3-inches minimum and 24-inches maximum of the edge of concrete at expansion joints, within 1-foot minimum and 2-feet maximum of the curb line, and within 3-inches minimum and 9-inches maximum of the perimeter of bridge drain assemblies.

6-02.3(10)F Bridge Approach Slab Orientation and Anchors

The second to last paragraph is revised to read:

The compression seal shall be a 2½ inch wide gland and shall conform to Section 9-04.1(4).

The last paragraph is deleted.

6-02.3(13)A Strip Seal Expansion Joint System

In item number 3 of the third paragraph, “Federal Standard 595” is revised to read “SAE AMS Standard 595”.

6-02.3(13)B Compression Seal Expansion Joint System

The first paragraph is revised to read:

Compression seal glands shall conform to Section 9-04.1(4) and be sized as shown in the Plans.

6-02.3(14)C Pigmented Sealer for Concrete Surfaces

This section is supplemented with the following new paragraph:

Pigmented Sealer Materials shall be a product listed in the current WSDOT Qualified Products List (QPL). If the pigmented sealer material is not listed in the current WSDOT QPL, a sample shall be submitted to the State Materials Laboratory in Tumwater for evaluation and acceptance in accordance with Section 9-08.3.

6-02.3(20) Grout for Anchor Bolts and Bridge Bearings

The second, third and fourth paragraphs are revised to read:

Grout shall be a workable mix with a viscosity that is suitable for the intended application. Grout shall not be placed outside of the manufacturer recommended range of thickness. The Contractor shall receive concurrence from the Engineer before using the grout.

Field grout cubes and cylinders shall be fabricated and tested in accordance with Section 9-20.3 when requested by the Engineer, but not less than once per bridge pier or once per day.

Before placing grout, the substrate on which it is to be placed shall be prepared as recommended by the manufacturer to ensure proper bonding. The grout shall be cured as recommended by the manufacturer. The grout may be loaded when a minimum of 4,000 psi compressive strength is attained.

The fifth paragraph is deleted.

6-02.3(23) Opening to Traffic

This section is supplemented with the following new paragraph:

After curing bridge approach slabs in accordance with Section 6-02.3(11), the bridge approach slabs may be opened to traffic when a minimum compressive strength of 2,500 psi is achieved.

6-02.3(24)C Placing and Fastening

This section is revised to read:

The Contractor shall position reinforcing steel as the Plans require and shall ensure that the steel is set within specified tolerances. Adjustments to reinforcing details outside of specified tolerances to avoid interferences and for other purposes are acceptable when approved by the Engineer.

When spacing between bars is 1 foot or more, they shall be tied at all intersections. When spacing is less than 1 foot, every other intersection shall be tied. If the Plans require bundled bars, they shall be tied together with wires at least every 6 feet. All epoxy-coated bars in the top mat of the bridge deck shall be tied at all intersections, however they may be tied at alternate intersections when spacing is less than 1 foot in each direction and they are supported by continuous supports meeting all other requirements of supports for epoxy-coated bars. Other epoxy-coated bars shall also be tied at all intersections, but shall be tied at alternate intersections when spacing is less than 1 foot in each direction. Wire used for tying epoxy-coated reinforcing steel shall be plastic coated. **Tack welding is not permitted on reinforcing steel**.

Abrupt bends in the steel are permitted only when one steel member bends around another. Vertical stirrups shall pass around main reinforcement or be firmly attached to it.

For slip-formed concrete, the reinforcing steel bars shall be tied at all intersections and cross braced to keep the cage from moving during concrete placement. Cross bracing shall be with additional reinforcing steel. Cross bracing shall be placed both longitudinally and transversely.

After reinforcing steel bars are placed in a traffic or pedestrian barrier and prior to slip-form concrete placement, the Contractor shall check clearances and reinforcing steel bar placement. This check shall be accomplished by using a template or by operating the slip-form machine over the entire length of the traffic or pedestrian barrier. All clearance and reinforcing steel bar placement deficiencies shall be corrected by the Contractor before slip-form concrete placement.

Precast concrete supports (or other accepted devices) shall be used to maintain the concrete coverage required by the Plans. The precast concrete supports shall:

1. Have a bearing surface measuring not greater than 2 inches in either dimension, and

2. Have a compressive strength equal to or greater than that of the concrete in which they are embedded.

In slabs, each precast concrete support shall have either: (1) a grooved top that will hold the reinforcing bar in place, or (2) an embedded wire that protrudes and is tied to the reinforcing steel. If this wire is used around epoxy-coated bars, it shall be coated with plastic.

Precast concrete supports may be accepted based on a Manufacturer's Certificate of Compliance.

In lieu of precast concrete supports, the Contractor may use metal or all-plastic supports to hold uncoated bars. Any surface of a metal support that will not be covered by at least ½ inch of concrete shall be one of the following:

1. Hot-dip galvanized after fabrication in keeping with AASHTO M232 Class D;

2. Coated with plastic firmly bonded to the metal. This plastic shall be at least 3⁄32 inch thick where it touches the form and shall not react chemically with the concrete when tested in the State Materials Laboratory. The plastic shall not shatter or crack at or above -5°F and shall not deform enough to expose the metal at or below 200°F; or

3. Stainless steel that meet the requirements of ASTM A493, Type 302. Stainless steel chair supports are not required to be galvanized or plastic coated.

In lieu of precast concrete supports, epoxy-coated reinforcing bars may be supported by one of the following:

1. Metal supports coated entirely with a dielectric material such as epoxy or plastic,

2. Other epoxy-coated reinforcing bars, or

3. All-plastic supports.

Damaged coatings on metal bar supports shall be repaired prior to placing concrete.

All-plastic supports shall be lightweight, non-porous, and chemically inert in concrete. All-plastic supports shall have rounded seatings, shall not deform under load during normal temperatures, and shall not shatter or crack under impact loading in cold weather. All-plastic supports shall be placed at spacings greater than 1 foot along the bar and shall have at least 25 percent of their gross place area perforated to compensate for the difference in the coefficient of thermal expansion between plastic and concrete. The shape and configuration of all-plastic supports shall permit complete concrete consolidation in and around the support.

A “mat” is two adjacent and perpendicular layers of reinforcing steel. In bridge decks, top and bottom mats shall be supported adequately enough to hold both in their proper positions. If bar supports directly support, or are directly supported on No. 4 bars, they shall be spaced at not more than 3-foot intervals (or not more than 4-foot intervals for bars No. 5 and larger). Wire ties to girder stirrups shall not be considered as supports. To provide a rigid mat, the Contractor shall add other supports and tie wires to the top mat as needed.

Unless noted otherwise, the minimum concrete cover for main reinforcing bars shall be:

3 inches to a concrete surface deposited against earth without intervening forms.

2½ inches to the top surface of a concrete bridge deck or bridge approach slab.

2 inches to a concrete surface when not specified otherwise in this section or in the Contract documents.

1½ inches to a concrete barrier or curb surface.

Except for top cover in bridge decks and bridge approach slabs, minimum concrete cover to ties and stirrups may be reduced by ½ inch but shall not be less than 1 inch. Minimum concrete cover shall also be provided to the outermost part of mechanical splices and headed steel reinforcing bars.

Reinforcing steel bar location, concrete cover and clearance shall not vary more than the following tolerances from what is specified in the Contract documents:

Reinforcing bar location for members 12 inches or less in thickness: ±0.25 inch

Reinforcing bar location for members greater than 12 inches in thickness: ±0.375 inch

Reinforcing bar location for bars placed at equal spacing within a plane: the greater of either ±1 inch or ±1 bar diameter within the plane. The total number of bars shall not be fewer than that specified.

The clearance between reinforcement shall not be less than the greater of the bar diameter or 1 inch for unbundled bars. For bundled bars, the clearance between bundles shall not be less than the greater of 1 inch or a bar diameter derived from the equivalent total area of all bars in the bundle.

Longitudinal location of bends and ends of bars: ±1 inch

Embedded length of bars and length of bar lap splices:

No. 3 through No. 11: -1 inch

No. 14 through No. 18: -2 inches

Concrete cover measured perpendicular to concrete surface (except for the top surface of bridge decks, bridge approach slabs and other roadway surfaces): ±0.25 inch

Concrete cover measured perpendicular to concrete surface for the top surface of bridge decks, bridge approach slabs and other roadway surfaces: +0.25 inch, -0 inch

Before placing any concrete, the Contractor shall:

1. Clean all mortar from reinforcement, and

2. Obtain the Engineer's permission to place concrete after the Engineer has inspected the placement of the reinforcing steel. (Any concrete placed without the Engineer's permission shall be rejected and removed.)

6-02.3(25)H Finishing

The last paragraph is revised to read:

The Contractor may repair defects in prestressed concrete girders in accordance with Section 6-01.16.

6-02.3(25)I Fabrication Tolerances

Item number 12 of the first paragraph is revised to read:

12. Stirrup Projection from Top of Girder:

Wide flange thin deck and slab girders: ± ½ inch

All other girders: ± ¾ inch

6-02.3(27) Concrete for Precast Units

The last sentence of the first paragraph is revised to read:

Type III portland cement or blended hydraulic cement is permitted to be used in precast concrete units.

6-02.3(28)B Casting

In the second paragraph, the reference to Section 6-02.3(25)B is revised to read Section 6-02.3(25)C.

6-02.3(28)D Contractors Control Strength

In the first paragraph, “WSDOT FOP for AASHTO T 23” is revised to read “FOP for AASHTO T 23”.

6-02.3(28)E Finishing

This section is supplemented with the following:

The Contractor may repair defects in precast panels in accordance with Section 6-01.16.

6-03.AP6

Section 6-03, Steel Structures
January 7, 2019

6-03.2 Materials

In the first paragraph, the material reference for Paints is revised to read:

Paints and Related Materials 9-08

6-03.3(25)A3 Ultrasonic Inspection

The first paragraph (up until the colon) is revised to read:

Complete penetration groove welds on plates 5/16 inch and thicker in the following welded assemblies or Structures shall be 100 percent ultrasonically inspected:

6-03.3(33) Bolted Connections

The first paragraph is supplemented with the following:

After final tightening of the fastener components, the threads of the bolts shall at a minimum be flush with the end of the nut.

The following is inserted after the third sentence of the fourth paragraph:

When galvanized bolts are specified, tension-control galvanized bolts are not permitted.

6-05.AP6

Section 6-05, Piling
January 2, 2018

6-05.3(9)A Pile Driving Equipment Approval

The fourth sentence of the second paragraph is revised to read:

For prestressed concrete piles, the allowable driving stress in kips per square inch shall be $0.095 \cdot \sqrt{f'_c}$ plus prestress in tension, and 0.85f'$_c$ minus prestress in compression, where f'$_c$ is the concrete compressive strength in kips per square inch.

6-07.AP6

Section 6-07, Painting
January 7, 2019

6-07.1 Description

The first sentence is revised to read:

This work consists of containment, surface preparation, shielding adjacent areas from work, testing and disposing of debris, furnishing and applying paint, and cleaning up after painting is completed.

6-07.2 Materials

The material reference for Paint is revised to read:

Paint and Related Materials 9-08

6-07.3(1)A Work Force Qualifications for Shop Application of Paint

This section is supplemented with the following new sentence:

The work force may be accepted based on the approved facility.

6-07.3(1)B Work Force Qualifications for Field Application of Paint

The first two paragraphs are revised to read:

The Contractor preparing the surface and applying the paint shall be certified under SSPC-QP 1 or NACE International Institute Contractor Accreditation Program (NIICAP) AS 1.

The Contractor removing and otherwise disturbing existing paint containing lead and other hazardous materials shall be certified under SSPC-QP 2, Category A or NIICAP AS 2.

The third paragraph (up until the colon) is revised to read:

In lieu of the above SSPC or NIICAP certifications, the Contractor performing the specified work shall complete both of the following actions:

Item number 2 of the third paragraph is revised to read:

2. The Contractor's quality control inspector(s) for the project shall be NACE-certified CIP Level 3 or SSPC Protective Coating Inspector (PCI) Level 3.

6-07.3(2) Submittals

The first paragraph is supplemented with the following:

Each component of the plan shall identify the specification section it represents.

6-07.3(2)B Contractor's Quality Control Program Submittal Component

The numbered list in the first paragraph is revised to read:

1. Description of the inspection procedures, tools, techniques and the acceptance criteria for all phases of work.

2. Procedure for implementation of corrective action for non-conformance work.

3. The paint system manufacturer's recommended methods of preventing defects.

4. The Contractor's frequency of quality control inspection for each phase of work.

5. Example of each completed form(s) of the daily quality control report used to document the inspection work and tests performed by the Contractor's quality control personnel.

6-07.3(2)C Paint System Manufacturer and Paint System Information Submittal Component

Item number 1 is revised to read:

1. Product data sheets and Safety Data Sheets (SDS) on the paint materials, paint preparation, and paint application, as specified by the paint manufacturer, including:

    a. All application instructions, including the mixing and thinning directions.

    b. Recommended spray nozzles and pressures.

    c. Minimum and maximum drying time between coats.

    d. Restrictions on temperature and humidity.

    e. Repair procedures for shop and field applied coatings.

    f. Maximum dry film thickness for each coat.

    g. Minimum wet film thickness for each coat to achieve the specified minimum dry film thickness.

6-07.3(2)D Hazardous Waste Containment, Collection, Testing, and Disposal Submittal Component

The first paragraph (up until the colon) is revised to read:

The hazardous waste containment, collection, testing, and disposal shall meet all Federal and State requirements, and the submittal component of the painting plan shall include the following:

6-07.3(2)E Cleaning and Surface Preparation Submittal Component

Item 1(b) of the first paragraph is revised to read::

b. Type, manufacturer, and brand of abrasive blast material and all associated additives, including Safety Data Sheets (SDS).

6-07.3(3)B Quality Control and Quality Assurance for Field Application of Paint

The last sentence of the first paragraph (excluding the numbered list) is revised to read:

> The Contractor's quality control operations shall include a minimum monitoring and documenting the following for each working day:

Item number 1 in the fourth paragraph is revised to read:

> 1. Environmental conditions for painting in accordance with ASTM E 337.

Item number 4 in the fourth paragraph is revised to read:

> 4. Pictorial of surface preparation guides in accordance with SSPC-VIS 1, 3, 4, and 5.

Item number 5 in the fourth paragraph is revised to read:

> 5. Surface profile by Keanne-Tator comparator in accordance with ASTM D 4417 and SSPC PA17.

6-07.3(4) Paint System Manufacturer's Technical Representative

This section is revised to read:

> The paint system manufacturer's representative shall be present at the jobsite for the pre-painting conference and for the first day of paint application, and shall be available to the Contractor and Contracting Agency for consultation for the full project duration.

6-07.3(5) Pre-Painting Conference

The second paragraph is revised to read:

> If the Contractor's key personnel change between any work operations, an additional conference shall be held if requested by the Engineer.

6-07.3(6)A Paint Containers

In item number 2 of the first paragraph, "Federal Standard 595" is revised to read "SAE AMS Standard 595".

6-07.3(6)B Paint Storage

Item number 2 of the second paragraph is revised to read:

> 2. The Contractor shall monitor and document daily the paint material storage facility with a high-low recording thermometer device.

6-07.3(7) Paint Sampling and Testing

The first two paragraphs are revised to read:

> The Contractor shall provide the Engineer 1 quart of each paint representing each lot. Samples shall be accompanied with a Safety Data Sheet.
>
> If the quantity of paint required for each component of the paint system for the entire project is 20 gallons or less, then the paint system components will be accepted as specified in Section 9-08.1(7).

6-07.3(8)A Paint Film Thickness Measurement Gages

The first paragraph is revised to read:

> Paint dry film thickness measurements shall be performed with either a Type 1 pull-off gage or a Type 2 electronic gage as specified in SSPC Paint Application Specification No. 2, Procedure for Determining Conformance to Dry Coating Thickness Requirements.

6-07.3(9) Painting New Steel Structures

The last sentence of the second paragraph is revised to read:

> Welded shear connectors are not required to painted.

The last paragraph is revised to read:

> Temporary attachments or supports for scaffolding, containment or forms shall not damage the paint system.

6-07.3(9)A Paint System

The first paragraph is revised to read:

> The paint system applied to new steel surfaces shall consist of the following:
>
> Option 1 (component based paint system):

Primer Coat – Inorganic Zinc Rich	9-08.1(2)C
Intermediate Coat – Moisture Cured Polyurethane	9-08.1(2)G
Intermediate Stripe Coat – Moisture Cured Polyurethane	9-08.1(2)G
Top Coat – Moisture Cured Polyurethane	9-08.1(2)H

> Option 2 (performance based paint system):

Primer Coat – Inorganic Zinc Rich	9-08.1(2)M
Intermediate Coat – Epoxy	9-08.1(2)M
Intermediate Stripe Coat – Epoxy	9-08.1(2)M
Top Coat – Polyurethane	9-08.1(2)M

The following new paragraph is inserted after the first paragraph:

> Paints and related materials shall be products listed in the current WSDOT Qualified Products List (QPL). Component based paint systems shall be listed on the QPL in the applicable sections of Section 9-08. Performance based systems shall be listed on the current Northeast Protective Coatings Committee (NEPCOAT) Qualified Products List "A" as listed on the WSDOT QPL in Section 9-08.1(2)M. If the paint and related materials for the component based system is not listed in the current WSDOT QPL, a sample shall be submitted to the State Materials Laboratory in Tumwater for evaluation and acceptance in accordance with Section 9-08.

6-07.3(9)C Mixing and Thinning Paint

This section is revised to read:

The Contractor shall thoroughly mix paint in accordance with the manufacturer's written recommendations and by mechanical means to ensure a uniform and lump free composition. Paint shall not be mixed by means of air stream bubbling or boxing. Paint shall be mixed in the original containers and mixing shall continue until all pigment or metallic powder is in suspension. Care shall be taken to ensure that the solid material that has settled to the bottom of the container is thoroughly dispersed. After mixing, the Contractor shall inspect the paint for uniformity and to ensure that no unmixed pigment or lumps are present.

Catalysts, curing agents, hardeners, initiators, or dry metallic powders that are packaged separately may be added to the base paint in accordance with the paint manufacturer's written recommendations and only after the paint is thoroughly mixed to achieve a uniform mixture with all particles wetted. The Contractor shall then add the proper volume of curing agent to the correct volume of base and mix thoroughly. The mixture shall be used within the pot life specified by the manufacturer. Unused portions shall be discarded at the end of each work day. Accelerants are not permitted except as allowed by the Engineer.

The Contractor shall not add additional thinner at the application site except as allowed by the Engineer. The amount and type of thinner, if allowed, shall conform to the manufacturer's specifications. If recommended by the manufacturer and allowed by the Engineer, a measuring cup shall be used for the addition of thinner to any paint with graduations in ounces. No un-measured addition of thinner to paint will be allowed. Any paint found to be thinned by unacceptable methods will be rejected.

When recommended by the manufacturer, the Contractor shall constantly agitate paint during application by use of paint pots equipped with mechanical agitators.

The Contractor shall strain all paint after mixing to remove undesirable matter, but without removing the pigment or metallic powder.

Paint shall be stored and mixed in a secure, contained location to eliminate the potential for spills into State waters and onto the ground and highway surfaces.

6-07.3(9)D Coating Thickness

This section is revised to read:

Dry film thickness shall be measured in accordance with SSPC Paint Application Specification No. 2, *Procedure for Determining Conformance to Dry Coating Thickness Requirements*.

The minimum dry film thickness of the primer coat shall not be less than 2.5 mils.

The minimum dry film thickness of each coat (combination of intermediate and intermediate stripe, and top) shall be not less than 3.0 mils.

The dry film thickness of each coat shall not be thicker than the paint manufacturer's recommended maximum thickness.

The minimum wet film thickness of each coat shall be specified by the paint manufacturer to achieve the minimum dry film thickness.

Film thickness, wet and dry, will be measured by gages conforming to Section 6-07.3(8)A.

Wet measurements will be taken immediately after the paint is applied in accordance with ASTM D4414. Dry measurements will be taken after the coating is dry and hard in accordance with SSPC Paint Application Specification No. 2.

Each painter shall be equipped with wet film thickness gages and shall be responsible for performing frequent checks of the paint film thickness throughout application.

Coating thickness measurements may be made by the Engineer after the application of each coat and before the application of the succeeding coat. In addition, the Engineer may inspect for uniform and complete coverage and appearance. One hundred percent of all thickness measurements shall meet or exceed the minimum wet film thickness. In areas where wet film thickness measurements are impractical, dry film thickness measurements may be made. If a question arises about an individual coat's thickness or coverage, it may be verified by the use of a Tooke gage in accordance with ASTM D4138.

If the specified number of coats does not produce a combined dry film thickness of at least the sum of the thicknesses required per coat, if an individual coat does not meet the minimum thickness, or if visual inspection shows incomplete coverage, the coating system will be rejected and the Contractor shall discontinue painting and surface preparation operations and shall submit a Type 2 Working Drawing of the repair proposal. The repair proposal shall include documentation demonstrating the cause of the less-than-minimum thickness, along with physical test results, as necessary, and modifications to Work methods to prevent similar results. The Contractor shall not resume painting or surface preparation operations until receiving the Engineer's acceptance of the completed repair.

6-07.3(9)E Surface Temperature Requirements Prior to Application of Paint

This section, including title, is revised to read:

6-07.3(9)E Environmental Condition Requirements Prior to Application of Paint

Paint shall be applied only during periods when:

1. Air and steel temperatures are in accordance with the paint manufacturer's recommendations but in no case less than 35°F nor greater than 115°F.

2. Steel surface temperature is a minimum of 5°F above the dew point.

3. Steel surface is not wet.

4. Relative humidity is within the manufacturer's recommended range.

5. The anticipated ambient temperature will remain above 35°F or the manufacturer's minimum temperature, whichever is greater, during the paint drying and curing period.

Application will not be allowed if conditions are not favorable for proper application and performance of the paint.

Paint shall not be applied when weather conditions are unfavorable to proper curing. If a paint system manufacturer's recommendations allow for application of a paint under environmental conditions other than those specified, the Contractor shall submit a Type 2 Working Drawing consisting of a letter from the paint manufacturer specifying the environmental conditions under which the paint can be applied. Application of paint under environmental conditions other than those specified in this section will not be allowed without the Engineer's concurrence.

6-07.3(9)F Shop Surface Cleaning and Preparation

The last sentence is revised to read:

The entire steel surface to be painted, including surfaces specified in Section 6-07.3(9)G to receive a mist coat of primer, shall be cleaned to a near white condition in accordance with SSPC-SP 10, *Near-white Metal Blast Cleaning*, and shall be in this condition immediately prior to paint application.

6-07.3(9)G Application of Shop Primer Coat

The first paragraph is supplemented with the following:

Repairs of the shop primer coat shall be prepared in accordance with the painting plan. Shop primer coat repair paint shall be selected from the approved component based or performance based paint system in accordance with Section 6-07.3(10)H.

6-07.3(9)H Containment for Field Coating

This section is revised to read:

The Contractor shall use a containment system in accordance with Section 6-07.3(10)A for surface preparation and prime coating of all uncoated areas remaining, including bolts, nuts, washers, and splice plates.

During painting operations of the intermediate, stripe and top coats the Contractor shall furnish, install, and maintain drip tarps below the areas to be painted to contain all spilled paint, buckets, brushes, and other deleterious material, and prevent such materials from reaching the environment below or adjacent to the structure being painted. Drip tarps shall be absorbent material and hung to minimize puddling. The Contractor shall evaluate the project-specific conditions to determine the specific type and extent of containment needed to control the paint emissions and shall submit a containment plan in accordance with Section 6-07.3(2).

6-07.3(9)I Application of Field Coatings

This section is revised to read:

An on-site supervisor shall be present for each work shift at the bridge site.

Upon completion of erection Work, all uncoated or damaged areas remaining, including bolts, nuts, washers, and splice plates, shall be prepared in accordance with Section 6-07.3(9)F, followed by a field primer coat of a zinc-rich primer and final coats of paint selected from the approved component or performance based paint system in accordance with Section 6-07.3(10)H. . The intermediate, intermediate stripe, and top coats shall be applied in accordance with the manufacturer's written recommendations.

Upon completion of erection Work, welds for steel column jackets may be prepared in accordance with SSPC-SP 15, Commercial Grade Power Tool Cleaning.

The minimum drying time between coats shall be as shown in the product data sheets, but not less than 12 hours. The Contractor shall determine whether the paint has cured sufficiently for proper application of succeeding coats.

The maximum time between intermediate and top coats shall be in accordance with the manufacturer's written recommendations. If the maximum time between coats is exceeded, all newly coated surfaces shall be prepared to SSPC-SP 7, *Brush-off Blast Cleaning*, and shall be repainted with the same paint that was cleaned, at no additional cost to the Contracting Agency.

Each coat shall be applied in a uniform layer, completely covering the preceding coat. The Contractor shall correct runs, sags, skips, or other deficiencies before application of succeeding coats. Such corrective work may require re-cleaning, application of additional paint, or other means as determined by the Engineer, at no additional cost to the Contracting Agency.

Dry film thickness measurements will be made in accordance with Section 6-07.3(9)D.

All paint damage that occurs shall be repaired in accordance with the manufacturer's written recommendations. On bare areas or areas of insufficient primer thickness, the repair shall include field-applied zinc-rich primer and the final coats of paint selected from the approved component or performance based paint system in accordance with Section 6-07.3(10)H. On areas where the primer is at least equal to the minimum required dry film thickness, the repair shall include the application of the final two coats of the paint system. All paint repair operations shall be performed by the Contractor at no additional cost or time to the Contracting Agency.

6-07.3(10)A Containment

The first sentence of the third paragraph is revised to read:

Emissions shall be assessed by Visible Emission Observations (Method A) in SSPC Technology Update No. 7, *Conducting Ambient Air, Soil, and Water Sampling of Surface Preparation and Paint Disturbance Activities*, Section 6.2 and shall be limited to the Level A Acceptance Criteria Option Level 0 Emissions standard.

6-07.3(10)D Surface Preparation Prior to Overcoat Painting

The first paragraph is revised to read:

The Contractor shall remove any visible oil, grease, and road tar in accordance with SSPC-SP 1, *Solvent Cleaning*.

The second paragraph is revised to read:

Following any preparation by SSPC-SP1, all steel surfaces to be painted shall be prepared in accordance with SSPC-SP 7, *Brush-off Blast Cleaning*. Surfaces inaccessible to brush-off blast shall be prepared in accordance with SSPC-SP 3, *Power Tool Cleaning*, as allowed by the Engineer.

The first sentence of the third paragraph is revised to read:

Following brush-off blast cleaning, the Contractor shall perform spot abrasive blast cleaning in accordance with SSPC-SP 6, *Commercial Blast Cleaning*.

The second to last sentence of the third paragraph is revised to read:

For small areas, as allowed by the Engineer, the Contractor may substitute cleaning in accordance with SSPC-SP 15, *Commercial Grade Power Tool Cleaning*.

6-07.3(10)G Treatment of Pack and Rust Gaps

The second paragraph is revised to read:

Pack rust forming a gap between steel surfaces of $\frac{1}{16}$ to ¼ inch shall be cleaned to a depth of at least one half of the gap width. The gaps shall be cleaned and prepared in accordance with SSPC-SP6. The cleaned gap shall be treated with rust penetrating sealer, prime coated, and then caulked to form a watertight seal along the top edge and the two sides of the steel pieces involved, using the rust penetrating sealer and caulk as accepted by the Engineer. The bottom edge or lowest edge of the steel pieces involved shall not be caulked.

The third paragraph is supplemented with the following:

Caulk shall be a single-component urethane sealant conforming to Section 9-08.7.

The fifth paragraph is revised to read:

At locations where gaps between steel surfaces exceed ¼ inch, the Contractor shall clean and prepare the gap in accordance SSPC-SP6, apply the rust penetrating sealer, apply the prime coat, and then fill the gap with foam backer rod material as accepted by the Engineer. The foam backer rod material shall be of sufficient diameter to fill the crevice or gap. The Contractor shall apply caulk over the foam backer rod material to form a watertight seal.

This section is supplemented with the following new paragraph:

Caulk and backer rod, if needed, shall be placed prior to applying the top coat. The Contractor, with the concurrence of the Engineer, may apply the rust penetrating sealer after application of the prime coat provided the primer is removed in the areas to be sealed. The areas to be sealed shall be re-cleaned and re-prepared in accordance with SSPC-SP6.

6-07.3(10)H Paint System

The first paragraph is revised to read:

The paint system applied to existing steel surfaces shall consist of the following five-coat system:

Option 1 (component based system):

Primer Coat – Zinc-filled Moisture Cured Polyurethane	9-08.1(2)F
Primer Stripe Coat - Moisture Cured Polyurethane	9-08.1(2)F
Intermediate Coat - Moisture Cured Polyurethane	9-08.1(2)G

Intermediate Stripe Coat - Moisture Cured Polyurethane	9-08.1(2)G
Top Coat - Moisture Cured Polyurethane	9-08.1(2)H

Option 2 (performance based system):

Primer Coat – Zinc-rich Epoxy	9-08.1(2)N
Primer Stripe Coat – Epoxy	9-08.1(2)N
Intermediate Coat – Epoxy	9-08.1(2)N
Intermediate Stripe Coat – Epoxy	9-08.1(2)N
Top Coat – Polyurethane	9-08.1(2)N

The following new paragraph is inserted after the first paragraph:

Paints and related materials shall be a product listed in the current WSDOT Qualified Products List (QPL). Component based paint systems shall be listed on the QPL in the applicable sections of Section 9-08. Performance based systems shall be listed on the current Northeast Protective Coatings Committee (NEPCOAT) Qualified Products List "B" as listed on the WSDOT QPL in Section 9-08.1(2)N. If the paint and related material for the component based system is not listed in the current WSDOT QPL, a sample shall be submitted to the State Materials Laboratory in Tumwater for evaluation and acceptance in accordance with Section 9-08.

6-07.3(10)J Mixing and Thinning Paint

This section is revised to read:

Mixing and thinning paint shall be in accordance with Section 6-07.3(9)C.

6-07.3(10)K Coating Thickness

This section is revised to read:

Coating thickness shall be in accordance with Section 6-07.3(9)D except the minimum dry film thickness of each coat (combination of primer and primer stripe, combination of intermediate and intermediate stripe, and top) shall not be less than 3.0 mils.

6-07.3(10)L Environmental Condition Requirements Prior to Application of Paint

This section is revised to read:

Environmental conditions shall be in accordance with Section 6-07.3(9)E.

6-07.3(10)M Steel Surface Condition Requirements Prior to Application of Paint

The third paragraph is revised to read:

Edges of existing paint shall be feathered in accordance with SSPC-PA 1, *Shop, Field, and Maintenance Coating of Metals*, Note 15.20.

6-07.3(10)N Field Coating Application Methods

The third sentence is revised to read:

The Contractor may apply stripe coat paint using spray or brush but shall follow spray application using a brush to ensure complete coverage around structural geometric

irregularities and to push the paint into gaps between existing steel surfaces and around rivets and bolts.

6-07.3(10)O Applying Field Coatings

The second to last paragraph is revised to read:

Each application of primer, primer stripe, intermediate, intermediate stripe, and top coat shall be considered as separately applied coats. The Contractor shall not use a preceding or subsequent coat to remedy a deficiency in another coat. The Contractor shall apply the top coat to at least the minimum specified top coat thickness, to provide a uniform appearance and consistent finish coverage.

6-07.3(10)P Field Coating Repair

The second sentence is revised to read:

Repair areas shall be cleaned of all damaged paint and the system reapplied using all coats typical to the paint system and shall meet the minimum coating thickness.

6-07.3(11)A Painting of Galvanized Surfaces

This section is revised to read:

All galvanized surfaces receiving paint shall be prepared for painting in accordance with the ASTM D 6386. The method of preparation shall be brush-off in accordance with SSPC-SP16 *Brush-Off Blast Cleaning of Coated and Uncoated Galvanized Steel, Stainless Steels, and Non-Ferrous Metals* or as otherwise allowed by the Engineer. The Contractor shall not begin painting until receiving the Engineer's acceptance of the prepared galvanized surface. For galvanized bolts used for replacement of deteriorated existing rivets, the Contractor, with the concurrence of the Engineer and after successful demonstration testing, may prepare galvanized surfaces in accordance with SSPC-SP1 followed by SSPC-SP2, *Hand Tool Cleaning* or SSPC-SP3, *Power Tool Cleaning*. The demonstration testing shall include adhesion testing of the first coat of paint over galvanized bolts, nuts, and washers or a representative galvanized surface. Adhesion testing shall be performed in accordance with ASTM D 4541 for 600 psi minimum adhesion. A minimum of 3 successful tests shall be performed on the galvanized surface prepared and painted using the same methods and materials to be used on the galvanized bolts, nuts and washers in the field.

6-07.3(11)A2 Paint Coat Materials

This section is revised to read:

The Contractor shall paint the dry surface as follows:

1. The first coat over a galvanized surface shall be an epoxy polyamide conforming to Section 9-08.1(2)E . In the case of galvanized bolts used for replacement of deteriorated existing rivets and for small surface areas less than or equal to one square foot, an intermediate moisture cured polyurethane conforming to Section 9-08.1(2)G may be used as a first coat. In both cases the first coat shall be compatible with galvanizing and as recommended by the top coat manufacturer.

2. The second coat shall be a top coat moisture cured aliphatic polyurethane conforming to Section 9-08.1(2)H or a top coat polyurethane conforming to

Section 6-07.3(10)H Option 2 NEPCOAT performance based paint specification compatible with the first coat as recommended by the manufacturer.

Each coat shall be dry before the next coat is applied. All coats applied in the shop shall be dried hard before shipment.

6-07.3(11)B Powder Coating of Galvanized Surfaces

This section is revised to read:

Powder coating of galvanized surfaces shall consist of the following coats:

1. The first coat shall be an epoxy powder primer coat conforming to Section 9-08.2.

2. The second coat shall be a polyester finish coat conforming to Section 9-08.2.

6-07.3(11)B3 Galvanized Surface Cleaning and Preparation

The first three paragraphs are revised to read:

Galvanized surfaces receiving the powder coating shall be cleaned and prepared for coating in accordance with ASTM D 7803, and the project-specific powder coating plan.

Assemblies conforming to the ASTM D 7803 definition for newly galvanized steel shall receive surface smoothing and surface cleaning in accordance with ASTM D 7803, Section 5, and surface preparation in accordance with ASTM D 7803, Section 5.1.3.

Assemblies conforming to the ASTM D 7803 definition for partially weathered galvanized steel shall be checked and prepared in accordance with ASTM D 7803, Section 6, before then receiving surface smoothing and surface cleaning in accordance with ASTM D 7803, Section 5, and surface preparation in accordance with ASTM D 7803, Section 5.1.3.

The fourth paragraph (up until the colon) is revised to read:

Assemblies conforming to the ASTM D 7803 definition for weathered galvanized steel shall be prepared in accordance with ASTM D 7803, Section 7 before then receiving surface smoothing and surface cleaning in accordance with ASTM D 7803, Section 5, and surface preparation in accordance with ASTM D 7803, Section 5.3 except as follows:

6-07.3(11)B5 Testing

Item number 4 in the first paragraph is revised to read:

4. Adhesion testing in accordance with ASTM D 4541 for 600 psi minimum adhesion for the complete two-component system.

The second sentence of the fourth paragraph is revised to read:

Rejected assemblies shall be repaired or recoated by the Contractor, at no additional expense to the Contracting Agency, in accordance with the powder coating

manufacturer's recommendation as detailed in the project-specific powder coating plan, until the assemblies satisfy the acceptance testing requirements.

6-07.3(12) Painting Ferry Terminal Structures

This section is revised to read:

Painting of ferry terminal Structures shall be in accordance with Section 6-07.3 as supplemented below.

This section is supplemented with the following new subsections:

6-07.3(12)A Painting New Steel Ferry Terminal Structures

Painting of new steel Structures shall be in accordance with Section 6-07.3(9) except that all coatings (primer, intermediate, intermediate stripe, and top) shall be applied in the shop with the following exceptions:

1. Steel surfaces to be field welded.

2. Steel surfaces to be greased.

3. The length of piles designated in the Plans not requiring painting.

The minimum drying time between coats shall be as shown in the product data sheets, but not less than 12 hours. The Contractor shall determine whether the paint has cured sufficiently for proper application of succeeding coats.

6-07.3(12)A1 Paint Systems

Paint systems for Structural Steel, which includes vehicle transfer spans and towers, pedestrian overhead loading structures and towers, upland structural steel and other elements as designated in the Special Provisions shall be as specified in Section 6-07.3(9)A.

Paint systems for Piling, Landing Aids and Life Ladders shall be as specified in the Special Provisions.

6-07.3(12)A2 Paint Color

Paint colors shall be as specified in the Special Provisions.

6-07.3(12)A3 Coating Thickness

Coating thicknesses shall be as specified in the Special Provisions.

6-07.3(12)A4 Application of Field Coatings

An on-site supervisor shall be present for each work shift at the project site.

Upon completion of erection Work, all uncoated or damaged areas remaining, including bolts, nuts, washers, splice plates, and field welds shall be prepared in accordance with SSPC-SP 1, Solvent Cleaning, followed by SSPC-SP 11, *Power Tool Cleaning to Bare Metal*. Surface preparation shall be measured according to SSPC-VIS 3. SSPC-SP 11 shall be performed for a minimum distance of 1 inch from the uncoated or damaged area. In addition, intact shop-applied coating surrounding the area shall be abraded or sanded for a distance of 6 inches out from the properly prepared clean/bare metal areas to provide adequate roughness for

application of field coatings. All sanding dust and contamination shall be removed prior to application of field coatings.

Field applied paint for Structural Steel shall conform to Section 6-07.3(10)H, as applicable. Field applied paint for Piling, Landing Aids and Life Ladders shall be as specified in the Special Provisions.

For areas above the tidal zone, the minimum drying time between coats shall be as shown in the product data sheets, but not less than 12 hours. For areas within the tidal zone, the minimum drying time between coats shall be as recommended by the paint system manufacturer. The Contractor shall determine whether the paint has cured sufficiently for proper application of succeeding coats.

The maximum time between intermediate and top coats shall be in accordance with the manufacturer's written recommendations. If the maximum time between coats is exceeded, all newly coated surfaces shall be prepared to SSPC-SP 3, *Power Tool Cleaning*, and shall be repainted with the same paint that was cleaned, at no additional cost to the Contracting Agency.

Each coat shall be applied in a uniform layer, completely covering the preceding coat. The Contractor shall correct runs, sags, skips, or other deficiencies before application of succeeding coats. Such corrective work may require re-cleaning, application of additional paint, or other means as determined by the Engineer, at no additional cost to the Contracting Agency.

Surface preparation for underwater locations shall consist of removing all dirt, oil, grease, loose paint, loose rust, and marine growth from the area that is to be repaired. The sound paint surrounding the damaged area shall be roughened to meet the requirements of the manufacturer. Paint for underwater applications shall be as specified in the Special Provisions and shall be applied in accordance with the manufacturer's recommendations.

6-07.3(12)B Painting Existing Steel Ferry Terminal Structures

Painting of existing steel structures shall be in accordance with Section 6-07.3(10) as supplemented by the following.

6-07.3(12)B1 Containment

Containment for full removal shall be in accordance with Section 6-07.3(10)A. Containment for overcoat systems shall be in accordance with all applicable Permits as required in the Special Provisions.

Prior to cleaning the Contractor shall enclose all exposed electrical and mechanical equipment to seal out dust, water, and paint. Non-metallic surfaces shall not be abrasive blasted or painted. Unless otherwise specified, the following metallic surfaces shall not be painted and shall be protected from abrasive blasting and painting:

1. Galvanized and stainless steel surfaces not previously painted,

2. Non-skid surfaces,

3. Unpainted intentionally greased surfaces,

4. Equipment labels, identification plates, tags, etc.,

5. Fire and emergency containers or boxes,

6. Mechanical hardware such as hoist sheaves, hydraulic cylinders, gear boxes, wire rope, etc.

The Contractor shall submit a Type 2 Working Drawing consisting of materials and equipment used to shield components specified to not be cleaned and painted. The Contractor shall shut off the power prior to working around electrical equipment. The Contractor shall follow the lock-out/tag-out safety provisions of the WAC 296-803 and all other applicable safety standards.

6-07.3(12)B2 Surface Preparation

For applications above high water and within the tidal zone, surface preparation for overcoat painting shall be in accordance with SSPC-SP 1, *Solvent Cleaning*, followed by SSPC-SP 3, *Power Tool Cleaning*. Use of wire brushes is not allowed. After SP 3 cleaning has been completed all surfaces exhibiting coating failure down to the steel substrate, and those exhibiting visible corrosion, shall be prepared down to clean bare steel in accordance with SSPC-SP 15, Commercial Grade *Power Tool Cleaning*. Surface preparation shall be measured according to SSPC-VIS 3. SSPC-SP 15 shall be performed for a minimum distance of 1 inch from the area exhibiting failure or visible corrosion. In addition, intact shop-applied coating surrounding the repair area shall be abraded or sanded for a distance of 6 inches out from the properly prepared clean/bare metal areas to provide adequate roughness for application of repair coatings. All sanding dust and contamination shall be removed prior to application of repair coatings. Surface preparation for full paint removal shall be in accordance with Section 6-07.3(10)E except SSPC-SP 11 will be permitted as detailed in the Contractor's painting plan and as allowed by the Engineer.

Surface preparation for underwater locations shall consist of removing all dirt, oil, grease, loose paint, loose rust, and marine growth from the area that is to be repaired. The sound paint surrounding the damaged area shall be roughened as required by the coating manufacturer.

Removed marine growth may be released to state waters provided the marine growth is not mixed with contaminants (paint, oil, rust, etc.) and it shall not accumulate on the sea bed. All marine growth containing contaminants shall be collected for proper disposal.

Surface preparation for the underside of bridge decks (consisting of either a steel grid system of main bars or tees and a light gauge metal form, in-filled with concrete or a corrugated light gauge metal form, infilled with concrete) shall be in accordance with SSPC-SP 2, *Hand Tool Cleaning* or SSPC-SP 3, *Power Tool Cleaning* with the intent of not causing further damage to the light gauge metal form. Following removal of any pack rust and corroded sections from the underside of the bridge deck, cleaning and flushing to remove salts and prior to applying the primer coat, the Contractor shall seal the entire underside of the deck system with rust-penetrating sealer. Damage to galvanized metal forms and/or grids shall be

repaired in accordance with ASTM A 780, with the preferred method of repair using paints containing zinc dust.

6-07.3(12)B3 Paint Systems

Paints systems for Structural Steel, which includes vehicle transfer spans and towers, pedestrian overhead loading structures and towers, upland structural steel and other elements as designated in the Special Provisions shall be as specified in Section 6-07.3(10)H.

Paint systems for Piling, Landing Aids, Life Ladders, underside of vehicle transfer span bridge decks, non-skid surface treated areas, and anti-graffiti coatings shall be as specified in the Special Provisions.

6-07.3(12)B4 Paint Color

Paint colors shall be as specified in the Special Provisions.

6-07.3(12)B5 Coating Thickness

Coating thicknesses shall be as specified in the Special Provisions.

6-07.3(12)B6 Application of Field Coatings

Application of field coatings shall be in accordance with Section 6-07.3(10)O and Section 6-07.3(12)A2 except for the following:

1. All coatings applied in the field shall be applied using a brush or roller. Spray application methods may be used if allowed by the Engineer.

2. Applied coatings shall not be immersed until the coating has been cured as required by the coating manufacturer.

3. Non-skid surface treatment products shall be applied in accordance with the manufacturer's recommendations.

4. Anti-graffiti coatings shall be applied in one coat following application of the top coat, where specified in the Plans.

6-07.3(14)B Reference Standards

The second standard reference (to SSPC CS 23.00), and its accompanying title, is revised to read:

SSPC CS 23.00	Specification for the Application of Thermal Spray Coatings (Metallizing) of Aluminum, Zinc, and Their Alloys and Composites for the Corrosion Protection of Steel

6-08.AP6

Section 6-08, Bituminous Surfacing on Structure Decks
January 7, 2019

6-08.3(7)A Concrete Deck Preparation

The first sentence of the first paragraph is revised to read:

The Contractor, with the Engineer, shall inspect the exposed concrete deck to establish the extent of bridge deck repair in accordance with Section 6-09.3(6).

6-08.3(8)A Structure Deck Preparation

The second sentence of the last paragraph is revised to read:

> Prior to applying the primer or sheet membrane, all dust and loose material shall be removed from the Structure Deck.

6-09.AP6

Section 6-09, Modified Concrete Overlays
January 7, 2019

6-09.3 Construction Requirements

This section is supplemented with the following new subsection:

> **6-09.3(15) Sealing and Texturing Concrete Overlay**
>
> After the requirements for checking for bond have been met, all joints and visible cracks shall be filled and sealed with a high molecular weight methacrylate resin (HMWM). Cracks 1⁄16 inch and greater in width shall receive two applications of HMWM. Immediately following the application of HMWM, the wetted surface shall be coated with sand for abrasive finish.
>
> After all cracks have been filled and sealed and the HMWM resin has cured, the concrete overlay surface shall receive a longitudinally sawn texture in accordance with Section 6-02.3(10)D5.
>
> Traffic shall not be permitted on the finished concrete until it has reached a minimum compressive strength of 3,000 psi as verified by rebound number determined in accordance with ASTM C805 and the longitudinally sawn texture is completed.

6-09.3(1)B Rotary Milling Machines

This section is revised to read:

> Rotary milling machines used to remove an upper layer of existing concrete overlay, when present, shall have a maximum operating weight of 50,000 pounds and conform to Section 6-08.3(5)B.

6-09.3(1)C Hydro-Demolition Machines

The first sentence of this section is revised to read:

> Hydro-demolition machines shall consist of filtering and pumping units operating in conjunction with a remote-controlled robotic device, using high-velocity water jets to remove sound concrete to the nominal scarification depth shown in the Plans with a single pass of the machine, and with the simultaneous removal of deteriorated concrete.

6-09.3(1)D Shot Blasting Machines

This section, including title, is revised to read:

> **6-09.3(1)D Vacant**

6-09.3(1)E Air Compressor

This section is revised to read:

Air compressors shall be equipped with oil traps to eliminate oil from being blown onto the bridge deck.

6-09.3(1)J Finishing Machine

This section is revised to read:

The finishing machine shall meet the requirements of Section 6-02.3(10) and the following requirements:

The finishing machine shall be equipped with augers, followed by an oscillating, vibrating screed, vibrating roller tamper, or a vibrating pan, followed by a rotating cylindrical double drum screed. The vibrating screed, roller tamper or pan shall be of sufficient length and width to properly consolidate the mixture. The vibrating frequency of the vibrating screed, roller tamper or pan shall be variable with positive control.

6-09.3(2) Submittals

Item number 1 and 2 are revised to read:

1. A Type 1 Working Drawing consisting of catalog cuts and operating parameters of the hydro-demolition machine selected by the Contractor for use in this project to scarify concrete surfaces.

2. A Type 1 Working Drawing consisting of catalog cuts, operating parameters, axle loads, and axle spacing of the rotary milling machine (if used to remove an upper layer of existing concrete overlay when present).

The first sentence of item number 3 is revised to read:

A Type 2 Working Drawing of the Runoff Water Disposal Plan.

6-09.3(5)A General

The first sentence of the fourth paragraph is revised to read:

All areas of the deck that are inaccessible to the selected scarifying machine shall be scarified to remove the concrete surface matrix to a maximum nominal scarification depth shown in the Plans by a method acceptable to the Engineer.

This section is supplemented with the following:

Concrete process water generated by scarifying concrete surface and removing existing concrete overlay operations shall be contained, collected, and disposed of in accordance with Section 5-01.3(11) and Section 6-09.3(5)C, and the Section 6-09.3(2) Runoff Water Disposal Plan.

6-09.3(5)B Testing of Hydro-Demolition and Shot Blasting Machines

This section's title is revised to read:

Testing of Hydro-Demolition Machines

The second paragraph is revised to read:

In the “sound” area of concrete, the equipment shall be programmed to remove concrete to the nominal scarification depth shown in the Plans with a single pass of the machine.

6-09.3(5)D Shot Blasting

This section, including title, is revised to read:

6-09.3(5)D Vacant

6-09.3(5)E Rotomilling

This section, including title, is revised to read:

6-09.3(5)E Removing Existing Concrete Overlay Layer by Rotomilling

When the Contractor elects to remove the upper layer of existing concrete overlay, when present, by rotomilling prior to final scarifying, the entire concrete surface of the bridge deck shall be milled to remove the surface matrix to the depth specified in the Plans with a tolerance as specified in Section 6-08.3(5)B. The operating parameters of the rotary milling machine shall be monitored in order to prevent the unnecessary removal of concrete below the specified removal depth.

6-09.3(6) Further Deck Preparation

The first paragraph is revised to read::

Once the lane or strip being overlaid has been cleaned of debris from scarifying, the Contractor, with the Engineer, shall perform a visual inspection of the scarified surface. The Contractor shall mark those areas of the existing bridge deck that are authorized by the Engineer for further deck preparation by the Contractor.

Item number 4 of the second paragraph is deleted.

The first sentence of the third paragraph is deleted.

6-09.3(6)A Equipment for Further Deck Preparation

This section is revised to read:

Further deck preparation shall be performed using either power driven hand tools conforming to Section 6-09.3(1)A, or hydro-demolition machines conforming to Section 6-09.3(1)C.

6-09.3(6)B Deck Repair Preparation

The second paragraph is deleted.

The last sentence of the second paragraph (after the preceding Amendment is applied) is revised to read:

In no case shall the depth of a sawn vertical cut exceed ¾ inch or to the top of the top steel reinforcing bars, whichever is less.

The first sentence of the third to last paragraph is revised to read:

Where existing steel reinforcing bars inside deck repair areas show deterioration greater than 20-percent section loss, the Contractor shall furnish and place steel reinforcing bars alongside the deteriorated bars in accordance with the details shown in the Standard Plans.

The last paragraph is deleted.

6-09.3(7) Surface Preparation for Concrete Overlay

The first seven paragraphs are deleted and replaced with the following:

Following the completion of any required further deck preparation the entire lane or strip being overlaid shall be cleaned to be free from oil and grease, rust and other foreign material that may still be present. These materials shall be removed by detergent-cleaning or other method accepted by the Engineer followed by sandblasting.

After detergent cleaning and sandblasting is completed, the entire lane or strip being overlaid shall be cleaned in final preparation for placing concrete.

Hand tool chipping, sandblasting and cleaning in areas adjacent to a lane or strip being cleaned in final preparation for placing concrete shall be discontinued when final preparation is begun. Scarifying and hand tool chipping shall remain suspended until the concrete has been placed and the requirement for curing time has been satisfied. Sandblasting and cleaning shall remain suspended for the first 24 hours of curing time after the completion of concrete placing.

Scarification, and removal of the upper layer of concrete overlay when present, may proceed during the final cleaning and overlay placement phases of the Work on adjacent portions of the Structure so long as the scarification and concrete overlay removal operations are confined to areas which are a minimum of 100 feet away from the defined limits of the final cleaning or overlay placement in progress. If the scarification and concrete overlay removal impedes or interferes in any way with the final cleaning or overlay placement as determined by the Engineer, the scarification and concrete overlay removal Work shall be terminated immediately and the scarification and concrete overlay removal equipment removed sufficiently away from the area being prepared or overlaid to eliminate the conflict. If the grade is such that water and contaminants from the scarification and concrete overlay removal operation will flow into the area being prepared or overlaid, the scarification and concrete overlay removal operation shall be terminated and shall remain suspended for the first 24 hours of curing time after the completion of concrete placement.

6-09.3(11) Placing Concrete Overlay

The first sentence of item number 3 in the fourth paragraph is revised to read:

Concrete shall not be placed when the temperature of the concrete surface is less than 45°F or greater than 75°F, and wind velocity at the construction site is in excess of 10 mph.

6-09.3(12) Finishing Concrete Overlay

The third paragraph is deleted.

The last paragraph is deleted.

6-09.3(13) Curing Concrete Overlay

The first sentence of the first paragraph is revised to read:

> As the finishing operation progresses, the concrete shall be immediately covered with a single layer of clean, new or used, wet burlap.

The last sentence of the second paragraph is deleted.

The following two new paragraphs are inserted after the second paragraph:

> As an alternative to the application of burlap and fog spraying described above, the Contractor may propose a curing system using proprietary curing blankets specifically manufactured for bridge deck curing. The Contractor shall submit a Type 2 Working Drawing consisting of details of the proprietary curing blanket system, including product literature and details of how the system is to be installed and maintained.
>
> The wet curing regimen as described shall remain in place for a minimum of 42-hours.

The last paragraph is deleted.

6-09.3(14) Checking for Bond

The first sentence of the first paragraph is revised to read:

> After the requirements for curing have been met, the entire overlaid surface shall be sounded by the Contractor, in a manner accepted by and in the presence of the Engineer, to ensure total bond of the concrete to the bridge deck.

The last sentence of the first paragraph is deleted.

The second paragraph is deleted.

6-10.AP6

Section 6-10, Concrete Barrier
August 6, 2018

6-10.2 Materials

In the first paragraph, the reference to “Portland Cement” is revised to read:

> Cement 9-01

6-10.3(6) Placing Concrete Barrier

The first two sentences of the first paragraph are revised to read:

> Precast concrete barriers Type 2, Type 4, Type F, precast single slope barrier, and transitions shall rest on a paved foundation shaped to a uniform grade and section. The foundation surface for precast concrete barriers Type 2, Type 4, Type F, precast single slope barrier, and transitions shall meet this test for uniformity: When a 10-foot straightedge is placed on the surface parallel to the centerline for the barrier, the surface shall not vary more than ¼ inch from the lower edge of the straightedge.

6-11.AP6

Section 6-11, Reinforced Concrete Walls
April 2, 2018

6-11.2 Materials

In the first paragraph, the reference to “Aggregates for Portland Cement Concrete” is revised to read:

Aggregates for Concrete 9-03.1

6-12.AP6

Section 6-12, Noise Barrier Walls
August 6, 2018

6-12.2 Materials

In the first paragraph, the reference to “Aggregates for Portland Cement Concrete” is revised to read:

Aggregates for Concrete 9-03.1

The first paragraph is supplemented with the following new material reference:

Noise Barrier Wall Access Door 9-06.17

6-12.3(9) Access Doors and Concrete Landing Pads

The second paragraph is deleted and replaced with the following:

All frame and door surfaces, except stainless steel surfaces, shall be painted in accordance with Section 6-07.3(9). Primer shall be applied to all non-stainless steel surfaces. All primer coated exposed metal surfaces shall be field painted with the remaining Section 6-07.3(9)A paint system coats. The top coat, when dry, shall match the color specified in the Plans or Special Provisions.

This section is supplemented with the following:

Access door deadbolt locks shall be capable of accepting a Best CX series core. The Contractor shall furnish and install a spring-loaded construction core lock with each lock. The Engineer will furnish the permanent Best CX series core for the Contractor to install at the conclusion of the project.

6-13.AP6

Section 6-13, Structural Earth Walls
August 6, 2018

6-13.2 Materials

In the first paragraph, the reference to “Aggregates for Portland Cement Concrete” is revised to read:

Aggregates for Concrete 9-03.1

6-13.3(4) Precast Concrete Facing Panel and Concrete Block Fabrication

Item number 1 of the sixth paragraph is revised to read:

1. Vertical dimensions shall be ± $\frac{1}{16}$ inch of the Plan dimension, and the rear height shall not exceed the front height.

Item number 3 of the sixth paragraph is revised to read:

3. All other dimensions shall be ± ¼ inch of the Plan dimension.

6-14.AP6

Section 6-14, Geosynthetic Retaining Walls
April 2, 2018

6-14.2 Materials

In the first paragraph, the references to “Portland Cement” and “Aggregates for Portland Cement Concrete” are revised to read:

Cement	9-01
Aggregates for Concrete	9-03.1

6-15.AP6

Section 6-15, Soil Nail Walls
January 7, 2019

6-15.3(7) Shotcrete Facing

The last paragraph is supplemented with the following:

After final tightening of the nut, the threads of the soil nail shall at a minimum be flush with the end of the nut.

6-16.AP6

Section 6-16, Soldier Pile and Soldier Pile Tieback Walls
April 2, 2018

6-16.2 Materials

In the first paragraph, the reference to “Aggregates for Portland Cement Concrete” is revised to read:

Aggregates for Concrete	9-03.1

6-18.AP6

Section 6-18, Shotcrete Facing
April 1, 2019

6-18.2 Materials

The reference to metakaolin is deleted.

6-18.3(3) Testing

In the last sentence of the first paragraph, “AASHTO T 24” is revised to read “ASTM C1604”.

6-18.3(3)B Production Testing

In the last sentence, “AASHTO T 24” is revised to read “ASTM C1604”.

6-18.3(4) Qualifications of Contractor’s Personnel

In the last sentence of the second paragraph, “AASHTO T 24” is revised to read “ASTM C1604”.

6-19.AP6

Section 6-19, Shafts
January 7, 2019

6-19.2 Materials

In the first paragraph, the references to “Portland Cement” and “Aggregates for Portland Cement Concrete” are revised to read:

Cement	9-01
Aggregates for Concrete	9-03.1

6-19.3(1)A Shaft Construction Tolerances

The last paragraph is supplemented with the following:

> The elevation of the top of the reinforcing cage for drilled shafts shall be within +6 inches and -3 inches from the elevation shown in the Plans.

6-19.3(2)D Nondestructive QA Testing Organization and Personnel

Item number 4 in the first paragraph is revised to read:

> 4. Personnel preparing test reports shall be a Professional Engineer, licensed under Title 18 RCW, State of Washington, and shall seal the report in accordance with WAC 196-23-020.

6-19.3(3)C Conduct of Shaft Casing Installation and Removal and Shaft Excavation Operations

The first paragraph is supplemented with the following:

> In no case shall shaft excavation and casing placement extend below the bottom of shaft excavation as shown in the Plans.

6-19.3(6)E Thermal Wire and Thermal Access Point (TAPS)

The third sentence of the third paragraph is revised to read:

> The thermal wire shall extend from the bottom of the reinforcement cage to the top of the shaft, with a minimum of 5-feet of slack wire provided above the top of shaft.

The following new sentence is inserted after the third sentence of the third paragraph:

> All thermal wires in a shaft shall be equal lengths.

6-19.3(9)D Nondestructive QA Testing Results Submittal

The last sentence of the first paragraph is revised to read:

Results shall be a Type 2E Working Drawing presented in a written report.

7-02.AP7

Section 7-02, Culverts
April 2, 2018

7-02.2 Materials

In the first paragraph, the references to “Portland Cement” and “Aggregates for Portland Cement Concrete” are revised to read:

Cement	9-01
Aggregates for Concrete	9-03.1

7-02.3(6)A4 Excavation and Bedding Preparation

The first sentence of the third paragraph is revised to read:

> The bedding course shall be a 6-inch minimum thickness layer of culvert bedding material, defined as granular material either conforming to Section 9-03.12(3) or to AASHTO Grading No. 57 as specified in Section 9-03.1(4)C.

7-05.AP7

Section 7-05, Manholes, Inlets, Catch Basins, and Drywells
August 6, 2018

7-05.3 Construction Requirements

The fourth sentence of the third paragraph is deleted.

7-08.AP7

Section 7-08, General Pipe Installation Requirements
April 2, 2018

7-08.3(3) Backfilling

The fifth sentence of the fourth paragraph is revised to read:

> All compaction shall be in accordance with the Compaction Control Test of Section 2-03.3(14)D except in the case that 100% Recycled Concrete Aggregate is used.

The following new sentences are inserted after the fifth sentence of the fourth paragraph:

> When 100% Recycled Concrete Aggregate is used, the Contractor may submit a written request to use a test point evaluation for compaction acceptance. Test Point evaluation shall be performed in accordance with SOP 738.

8-01.AP8

Section 8-01, Erosion Control and Water Pollution Control
April 1, 2019

8-01.1 Description

This section is revised to read:

This Work consists of furnishing, installing, maintaining, removing and disposing of best management practices (BMPs), as defined in the Washington Administrative Code (WAC) 173-201A, to manage erosion and water quality in accordance with these Specifications and as shown in the Plans or as designated by the Engineer.

The Contracting Agency may have a National Pollution Discharge Elimination System Construction Stormwater General Permit (CSWGP) as identified in the Contract Special Provisions. The Contracting Agency may or may not transfer coverage of the CSWGP to the Contractor when a CSWGP has been obtained. The Contracting Agency may not have a CSWGP for the project but may have another water quality related permit as identified in the Contract Special Provisions or the Contracting Agency may not have water quality related permits but the project is subject to applicable laws for the Work. Section 8-01 covers all of these conditions.

This section is supplemented with the following new subsection:

8-01.1(1) Definitions

1. pH Affected Stormwater

a. Stormwater contacting green concrete (concrete that has set/stiffen but is still curing), recycled concrete, or engineered soils (as defined in the Construction Stormwater General Permit (CSWGP)) as a natural process

b. pH monitoring shall be performed in accordance with the CSWGP, or Water Quality Standards (WQS in accordance with WAC 173-201A (surface) or 173-200C (ground)) when the CSWGP does not apply

c. May be neutralized and discharged to surface waters or infiltrated

2. pH Affected Non-Stormwater

a. Conditionally authorized in accordance with CSWGP Special Condition S.1.C., uncontaminated water contacting green concrete, recycled concrete, or engineered soils (as defined in the CSWGP)

b. Shall not be categorized as cementitious wastewater/concrete wastewater, as defined below

c. Shall be managed and treated in accordance with the CSWGP, or WQS when the CSWGP does not apply

d. pH adjustment and dechlorination may be necessary, as specified in the CSWGP or in accordance with WQS when the CSWGP does not apply

e. May be neutralized, treated, and discharged to surface waters in accordance with the CSWGP, with the exception of water-only shaft drilling slurry. Water-only shaft drilling slurry may be treated, neutralized, and infiltrated but not discharged to surface waters (Refer to Special Conditions S1.C. Authorized Discharges and S1.d Prohibited Discharges of the CSWGP)

3. Cementitious Wastewater/Concrete Wastewater

a. Any water that comes into contact with fine cementitious particles or slurry; any water used in the production, placement and/or clean-up of cementitious products; any water used to cut, grind, wash, or otherwise modify cementitious products

b. When any water, including stormwater, commingles with cementitious wastewater/concrete wastewater, the resulting water is considered cementitious wastewater/concrete wastewater and shall be managed to prevent discharge to waters of the State, including ground water

c. CSWGP Examples include: water used for or resulting from concrete truck/mixer/pumper/tool/chute rinsing or washing, concrete saw cutting and surfacing (sawing, coring, grinding, roughening, hydro-demolition, bridge and road surfacing)

d. Cannot be neutralized and discharged or infiltrated

8-01.2 Materials

The first paragraph is revised to read:

Materials shall meet the requirements of the following sections:

Corrugated Polyethylene Drain Pipe	9-05.1(6)
Quarry Spalls and Permeable Ballast	9-13
Erosion Control and Roadside Planting	9-14
Construction Geotextile	9-33

The second paragraph is deleted.

8-01.3(1) General

This section is revised to read:

Adaptive management shall be employed throughout the duration of the project for the implementation of erosion and water pollution control permit requirements for the current condition of the project site. The adaptive management includes the selection and utilization of BMPs, scheduling of activities, prohibiting unacceptable practices, implementing maintenance procedures, and other managerial practices that when used singularly or in combination, prevent or reduce the release of pollutants to waters of the State. The adaptive management shall use the means and methods identified in this section and means and methods identified in the Washington State Department of Transportation's Temporary Erosion and Sediment Control Manual or the Washington State Department of Ecology's Stormwater Management Manuals for construction stormwater.

The Contractor shall install a high visibility fence along the lines shown in the Plans or as instructed by the Engineer.

Throughout the life of the project, the Contractor shall preserve and protect the delineated preservation area, acting immediately to repair or restore any high visibility fencing damaged or removed.

All discharges to surface waters shall comply with surface water quality standards as defined in Washington Administrative Code (WAC) Chapter 173-201A. All discharges to groundwater shall comply with groundwater quality standards WAC Chapter 173-200. The Contractor shall comply with the CSWGP when the project is covered by the CSWGP.

Work, at a minimum, shall include the implementation of:

1. Sediment control measures prior to ground disturbing activities to ensure all discharges from construction areas receive treatment prior to discharging from the site.

2. Flow control measures to prevent erosive flows from developing.

3. Water management strategies and pollution prevention measures to prevent contamination of waters that will be discharged to surface waters or the ground.

4. Erosion control measures to stabilize erodible earth not being worked.

5. Maintenance of BMPs to ensure continued compliant performance.

6. Immediate corrective action if evidence suggests construction activity is not in compliance. Evidence includes sampling data, olfactory or visual evidence such as the presence of suspended sediment, turbidity, discoloration, or oil sheen in discharges.

To the degree possible, the Contractor shall coordinate this Work with permanent drainage and roadside restoration Work the Contract requires.

Clearing, grubbing, excavation, borrow, or fill within the Right of Way shall never expose more erodible earth than as listed below:

Western Washington (West of the Cascade Mountain Crest)	
May 1 through September 30	17 Acres
October 1 through April 30	5 Acres

Eastern Washington (East of the Cascade Mountain Crest)	
April 1 through October 31	17 Acres
November 1 through March 31	5 Acres

The Engineer may increase or decrease the limits based on project conditions.

Erodible earth is defined as any surface where soils, grindings, or other materials may be capable of being displaced and transported by rain, wind, or surface water runoff.

Erodible earth not being worked, whether at final grade or not, shall be covered within the specified time period (see the table below), using BMPs for erosion control.

Western Washington (West of the Cascade

Eastern Washington (East of the Cascade

Mountain Crest)	
October 1 through April 30	2 days maximum
May 1 to September 30	7 days maximum

Mountain Crest)	
October 1 through June 30	5 days maximum
November 1 through March 31	10 days maximum

When applicable, the Contractor shall be responsible for all Work required for compliance with the CSWGP including annual permit fees.

If the Engineer, under Section 1-08.6, orders the Work suspended, the Contractor shall continue to comply with this division during the suspension.

8-01.3(1)A Submittals

This section's content is deleted.

This section is supplemented with the following new subsection:

8-01.3(1)A1 Temporary Erosion and Sediment Control Plan

Temporary Erosion and Sediment Control (TESC) Plans consist of a narrative section and plan sheets that meets the Washington State Department of Ecology's Stormwater Pollution Prevention Plan (SWPPP) requirement in the CSWGP. For projects that do not require a CSWGP but have the potential to discharge to surface waters of the state, an abbreviated TESC plan shall be used, which may consist of a narrative and/or plan sheets and shall demonstrate compliance with applicable codes, ordinances and regulations, including the water quality standards for surface waters; Chapter 173-201A of the Washington Administrative Code (WAC) and water quality standards for groundwaters in accordance with Chapter 173-200 WAC.

The Contractor shall either adopt the TESC Plan in the Contract or develop a new TESC Plan. If the Contractor adopts the TESC Plan in scenarios in which the CSWGP is transferred to the Contractor, the Contractor shall modify the TESC Plan to match the Contractor's schedule, method of construction, and to include all areas that will be used to directly support construction activity such as equipment staging yards, material storage areas, or borrow areas. TESC Plans shall include all high visibility fence shown in the Plans. All TESC Plans shall meet the requirements of the current edition of the WSDOT Temporary Erosion and Sediment Control Manual M 3109 and be adaptively managed throughout construction based on site inspections and required sampling to maintain compliance with the CSWGP, or WQS when no CSWGP applies. The Contractor shall develop a schedule for implementation of the TESC work and incorporate it into the Contractor's progress schedule.

The Contractor shall submit their TESC Plan (either the adopted plan or new plan) as Type 2 Working Drawings. At the request of the Engineer, updated TESC Plans shall be submitted as Type 1 Working Drawings.

8-01.3(1)B Erosion and Sediment Control (ESC) Lead

This section is revised to read:

The Contractor shall identify the ESC Lead at the preconstruction discussions and in the TESC Plan. The ESC Lead shall have, for the life of the Contract, a current Certificate

of Training in Construction Site Erosion and Sediment Control from a course approved by the Washington State Department of Ecology. The ESC Lead must be onsite or on call at all times throughout construction. The ESC Lead shall be listed on the Emergency Contact List required under Section 1-05.13(1).

The ESC Lead shall implement the TESC Plan. Implementation shall include, but is not limited to:

1. Installing, adaptively managing, and maintaining temporary erosion and sediment control BMPs to assure continued performance of their intended function. Damaged or inadequate BMPs shall be corrected immediately.

2. Updating the TESC Plan to reflect current field conditions.

3. Discharge sampling and submitting Discharge Monitoring Reports (DMRs) to the Washington State Department of Ecology in accordance with the CSWGP.

4. Develop and maintain the Site Log Book as defined in the CSWGP. When the Site Log Book or portion thereof is electronically developed, the electronic documentation must be accessible onsite. As a part of the Site Log Book, the Contractor shall develop and maintain a tracking table to show that identified TESC compliance issues are fully resolved within 10 calendar days. The table shall include the date an issue was identified, a description of how it was resolved, and the date the issue was fully resolved.

The ESC Lead shall also inspect all areas disturbed by construction activities, all on-site erosion and sediment control BMPs, and all stormwater discharge points at least once every calendar week and within 24-hours of runoff events in which stormwater discharges from the site. Inspections of temporarily stabilized, inactive sites may be reduced to once every calendar month. The Washington State Department of Ecology's Erosion and Sediment Control Site Inspection Form, located at https://ecology.wa.gov/Regulations-Permits/Permits-certifications/Stormwater-general-permits/Construction-stormwater-permit, shall be completed for each inspection and a copy shall be submitted to the Engineer no later than the end of the next working day following the inspection.

8-01.3(1)C Water Management

This section is supplemented with the following new subsections:

8-01.3(1)C5 Water Management for In-Water Work Below Ordinary High Water Mark (OHWM)

Work over surface waters of the state (defined in WAC 173-201A-010) or below the OHWM (defined in RCW 90.58.030) shall comply with water quality standards for surface waters of the State of Washington.

8-01.3(1)C6 Environmentally Acceptable Hydraulic Fluid

All equipment containing hydraulic fluid that extends from a bridge deck over surface waters of the state or below the OHWM, shall be equipped with a biodegradable hydraulic fluid. The fluid shall achieve either a Pw1 Environmental Persistence Classification stated in ASTM D6046 (≥60% biodegradation in 28 days) or equivalent standard. Alternatively, hydraulic fluid that meets International Organization for

Standardization (ISO 15380), the European Union Ecolabel, or equivalent certification will also be accepted.

The Contractor shall submit a Type 1 Working Drawing consisting of a manufacturer catalog cut of the hydraulic fluid used.

The designation of biodegradable hydraulic fluid does not mean fluid spills are acceptable. The Contractor shall respond to spills to land or water in accordance with the Contract, the associated SPCC Plan, and all applicable local, state, and federal regulations.

8-01.3(1)C7 Turbidity Curtain

All Work for the turbidity curtain shall be in accordance with the manufacturer's recommendations for the site conditions. Removal procedures shall be developed and used to minimize silt release and disturbance of silt. The Contractor shall submit a Type 2 Working Drawing, detailing product information, installation and removal procedures, equipment and workforce needs, maintenance plans, and emergency repair/replacement plans.

Turbidity curtain materials, installation, and maintenance shall be sufficient to comply with water quality standards.

The Contractor shall notify the Engineer 10 days in advance of removing the turbidity curtain. All components of the turbidity curtain shall be removed from the project.

8-01.3(1)C1 Disposal of Dewatering Water

This section is revised to read:

When uncontaminated groundwater is encountered in an excavation on a project it may be infiltrated within vegetated areas of the right of way not designated as Sensitive Areas or incorporated into an existing stormwater conveyance system at a rate that will not cause erosion or flooding in any receiving surface water.

Alternatively, the Contractor may pursue independent disposal and treatment alternatives that do not use the stormwater conveyance system provided it is in compliance with the applicable WACs and permits.

8-01.3(1)C2 Process Wastewater

This section is revised to read:

Wastewater generated on-site as a byproduct of a construction process shall not be discharged to surface waters of the State. Some sources of process wastewater may be infiltrated in accordance with the CSWGP. Some sources of process wastewater may be disposed via independent disposal and treatment alternatives in compliance with the applicable WACs and permits.

8-01.3(1)C3 Shaft Drilling Slurry Wastewater

This section is revised to read:

Wastewater generated on-site during shaft drilling activity shall be managed and disposed of in accordance with the requirements below. No shaft drilling slurry wastewater shall be discharged to surface waters of the State. Neither the sediment nor

liquid portions of the shaft drilling slurry wastewater shall be contaminated, as detectable by visible or olfactory indication (e.g., chemical sheen or smell).

1. Water-only shaft drilling slurry or water slurry with accepted flocculants may be infiltrated on-site. Flocculants used shall meet the requirements of Section 9-14.5(1) or shall be chitosan products listed as General Use Level Designation (GULD) on the Washington State Department of Ecology's stormwater treatment technologies webpage for construction treatment. Infiltration is permitted if the following requirements are met:

    a. Wastewater shall have a pH of 6.5 – 8.5 prior to discharge.

    b. The amount of flocculant added to the slurry shall be kept to the minimum needed to adequately settle out solids. The flocculant shall be thoroughly mixed into the slurry.

    c. The slurry removed from the shaft shall be contained in a leak proof cell or tank for a minimum of 3 hours.

    d. The infiltration rate shall be reduced if needed to prevent wastewater from leaving the infiltration location. The infiltration site shall be monitored regularly during infiltration activity. All wastewater discharged to the ground shall fully infiltrate and discharges shall stop before the end of each work day.

    e. Drilling spoils and settled sediments remaining in the containment cell or tank shall be disposed of in accordance with Section 6-19.3(4)F.

    f. Infiltration locations shall be in upland areas at least 150 feet away from surface waters, wells, on-site sewage systems, aquifer sensitive recharge areas, sole source aquifers, well head protection areas, and shall be marked on the plan sheets before the infiltration activity begins.

    g. Prior to infiltration, the Contractor shall submit a Shaft Drilling Slurry Wastewater Management and Infiltration Plan as a Type 2 Working Drawing. This Plan shall be kept on-site, adapted if needed to meet the construction requirements, and updated to reflect what is being done in the field. The Working Drawing shall include, at a minimum, the following information:

        i. Plan sheet showing the proposed infiltration location and all surface waters, wells, on-site sewage systems, aquifer-sensitive recharge areas, sole source aquifers, and well-head protection areas within 150 feet.

        ii. The proposed elevation of soil surface receiving the wastewater for infiltration and the anticipated phreatic surface (i.e., saturated soil).

        iii. The source of the water used to produce the slurry.

        iv. The estimated total volume of wastewater to be infiltrated.

v. The accepted flocculant to be used (if any).

vi. The controls or methods used to prevent surface wastewater runoff from leaving the infiltration location.

vii. The strategy for removing slurry wastewater from the shaft and containing the slurry wastewater once it has been removed from the shaft.

viii. The strategy for monitoring infiltration activity and adapting methods to ensure compliance.

ix. A contingency plan that can be implemented immediately if it becomes evident that the controls in place or methods being used are not adequate.

x. The strategy for cleaning up the infiltration location after the infiltration activity is done. Cleanup shall include stabilizing any loose sediment on the surface within the infiltration area generated as a byproduct of suspended solids in the infiltrated wastewater or soil disturbance associated with BMP placement and removal.

2. Shaft drilling mineral slurry, synthetic slurry, or slurry with polymer additives not allowed for infiltration shall be contained and disposed of by the Contractor at an accepted disposal facility in accordance with Section 2-03.3(7)C. Spoils that have come into contact with mineral slurry shall be disposed of in accordance with Section 6-19.3(4)F.

8-01.3(1)C4 Management of Off-Site Water

This section is revised to read:

Prior to clearing and grubbing, the Contractor shall intercept all sources of off-site surface water and overland flow that will run-on to the project. Off-site surface water run-on shall be diverted through or around the project in a way that does not introduce construction related pollution. It shall be diverted to its preconstruction discharge location in a manner that does not increase preconstruction flow rate and velocity and protects contiguous properties and waterways from erosion. The Contractor shall submit a Type 2 Working Drawing consisting of the method for performing this Work.

8-01.3(1)E Detention/Retention Pond Construction

This section is revised to read:

Permanent or temporary ponds shall be constructed before beginning other grading and excavation Work in the area that drains into that pond. Detention/retention ponds may be constructed concurrently with grading and excavation when allowed by the Engineer. Temporary conveyances shall be installed concurrently with grading in accordance with the TESC Plan so that newly graded areas drain to the pond as they are exposed.

8-01.3(2) Seeding, Fertilizing, and Mulching

This section's title is revised to read:

8-01.3(2) Temporary Seeding and Mulching

8-01.3(2)A Preparation for Application

This section is revised to read:

A cleated roller, crawler tractor, or similar equipment, which forms longitudinal depressions at least 2 inches deep shall be used for compaction and preparation of the surface to be seeded. The entire area shall be uniformly covered with longitudinal depressions formed perpendicular to the natural flow of water on the slope. The soil shall be conditioned with sufficient water so the longitudinal depressions remain in the soil surface until completion of the seeding.

8-01.3(2)A1 Seeding

This section is deleted in its entirety.

8-01.3(2)A2 Temporary Seeding

This section is deleted in its entirety.

8-01.3(2)B Seeding and Fertilizing

This section, including title, is revised to read:

8-01.3(2)B Temporary Seeding

Temporary grass seed shall be a commercially prepared mix, made up of low growing grass species that will grow without irrigation at the project location, and accepted by the Engineer. The application rate shall be two pounds per 1000 square feet.

The Contractor shall notify the Engineer not less than 24 hours in advance of any seeding operation and shall not begin the Work until areas prepared or designated for seeding have been accepted. Following the Engineer's acceptance, seeding of the accepted slopes shall begin immediately.

Temporary seeding may be sown at any time allowed by the Engineer. Temporary seeding shall be sown by one of the following methods:

1. A hydro seeder that utilizes water as the carrying agent, and maintains continuous agitation through paddle blades. It shall have an operating capacity sufficient to agitate, suspend, and mix into a homogeneous slurry the specified amount of seed and water or other material. Distribution and discharge lines shall be large enough to prevent stoppage and shall be equipped with a set of hydraulic discharge spray nozzles that will provide a uniform distribution of the slurry.

2. Blower equipment with an adjustable disseminating device capable of maintaining a constant, measured rate of material discharge that will ensure an even distribution of seed at the rates specified.

3. Power-drawn drills or seeders.

4. Areas in which the above methods are impractical may be seeded by hand methods.

When seeding by hand, the seed shall be incorporated into the top ¼ inch of soil by hand raking or other method that is allowed by the Engineer.

Seed applied using a hydroseeder shall have a tracer added to visibly aid uniform application. This tracer shall not be harmful to plant, aquatic, or animal life. If Short-Term Mulch is used as a tracer, the application rate shall not exceed 250 pounds per acre.

Seed and fertilizer may be applied in one application provided that the fertilizer is placed in the hydroseeder tank no more than 1 hour prior to application.

8-01.3(2)D Mulching

This section, including title, is revised to read:

8-01.3(2)D Temporary Mulching

Temporary mulch shall be straw, wood strand, or HECP mulch and shall be used for the purpose of erosion control by protecting bare soil surface from particle displacement. Mulch shall not be applied below the anticipated water level of ditch slopes, pond bottoms, and stream banks. HECP mulch shall not be used within the Ordinary High Water Mark. Non-HECP mulches applied below the anticipated water level shall be removed or anchored down so that it cannot move or float, at no additional expense to the Contracting Agency.

Straw or wood strand mulch shall be applied at a rate to achieve at least 95 percent visual blockage of the soil surface.

Short Term Mulch shall be hydraulically applied at the rate of 2500 pounds per acre and may be applied in one lift.

Moderate Term Mulch and Long Term Mulch shall be hydraulically applied at the rate of 3500 pounds per acre with no more than 2000 pounds applied in any single lift.

Mulch sprayed on signs or sign Structures shall be removed the same day.

Areas not accessible by mulching equipment shall be mulched by accepted hand methods.

8-01.3(2)F Dates for Application of Final Seed, Fertilizer, and Mulch

This section is deleted in its entirety.

8-01.3(2)G Protection and Care of Seeded Areas

This section is deleted in its entirety.

8-01.3(2)H Inspection

This section is deleted in its entirety.

8-01.3(2)I Mowing

This section is deleted in its entirety.

8-01.3(3) Placing Biodegradable Erosion Control Blanket

This section's title is revised to read:

8-01.3(3) Placing Erosion Control Blanket

The first sentence of the first paragraph is revised to read:

Erosion Control Blankets are used as an erosion prevention device and to enhance the establishment of vegetation.

The second paragraph is revised to read:

When used to enhance the establishment of seeded areas, seeding and fertilizing shall be done prior to blanket installation.

8-01.3(4) Placing Compost Blanket

This section is revised to read:

Compost blankets are used for erosion control. Compost blanket shall be only be placed on ground surfaces that are steeper than 3-foot horizontal and 1-foot vertical though steeper slopes shall be broken by wattles or compost socks placed according to the Standard Plans. Compost shall be placed to a depth of 3 inches over bare soil. An organic tackifier shall be placed over the entire composted area when dry or windy conditions are present or expected. The tackifier shall be applied immediately after the application of compost to prevent compost from leaving the composted area.

Medium compost shall be used for the compost blanket. Compost may serve the purpose of soil amendment as specified in Section 8-02.3(6).

8-01.3(5) Plastic Covering

The first paragraph is revised to read:

Erosion Control – Plastic coverings used to temporarily cover stockpiled materials, slopes or bare soils shall be installed and maintained in a way that prevents water from intruding under the plastic and prevents the plastic cover from being damaged by wind. Plastic coverings shall be placed with at least a 12-inch overlap of all seams and be a minimum of 6 mils thick. Use soil stabilization and energy dissipation BMPs to minimize the erosive energy flows coming off sloped areas of plastic (e.g., toe of slope). When feasible, prevent the clean runoff from plastic from hitting bare soil. Direct flows from plastic to stabilized outlet areas.

8-01.3(7) Stabilized Construction Entrance

The first paragraph is revised to read:

Temporary stabilized construction entrance shall be constructed in accordance with the *Standard Plans*, prior to construction vehicles entering the roadway from locations that generate sediment track out on the roadway. Material used for stabilized construction entrance shall be free of extraneous materials that may cause or contribute to track out.

8-01.3(8) Street Cleaning

This section is revised to read:

Self-propelled pickup street sweepers shall be used to remove and collect dirt and other debris from the Roadway. The street sweeper shall effectively collect these materials and prevent them from being washed or blown off the Roadway or into waters of the

State. Street sweepers shall not generate fugitive dust and shall be designed and operated in compliance with applicable air quality standards. Material collected by the street sweeper shall be disposed of in accordance with Section 2-03.3(7)C.

When allowed by the Engineer, power broom sweepers may be used in non-sensitive areas. The broom sweeper shall sweep dirt and other debris from the roadway into the work area. The swept material shall be prevented from entering or washing into waters of the State.

Street washing with water will require the concurrence of the Engineer.

8-01.3(12) Compost Socks

The first two sentences of the first paragraph are revised to read:

Compost socks are used to disperse flow and sediment. Compost socks shall be installed as soon as construction will allow but before flow conditions create erosive flows or discharges from the site. Compost socks shall be installed prior to any mulching or compost placement.

8-01.3(13) Temporary Curb

The last two sentences of the second paragraph are revised to read:

Temporary curbs shall be a minimum of 4 inches in height. Temporary curb shall be installed so that ponding does not occur in the adjacent roadway.

8-01.3(14) Temporary Pipe Slope Drain

The third and fourth paragraphs are revised to read:

The pipe fittings shall be water tight and the pipe secured to the slope with metal posts, wood stakes, or sand bags.

The water shall be discharged to a stabilized conveyance, sediment trap, stormwater pond, rock splash pad, or vegetated strip, in a manner to prevent erosion and maintain water quality compliance.

The last paragraph is deleted.

8-01.3(15) Maintenance

This section is revised to read:

Erosion and sediment control BMPs shall be maintained or adaptively managed as required by the CSWGP until the Engineer determines they are no longer needed. When deficiencies in functional performance are identified, the deficiencies shall be rectified immediately.

The BMPs shall be inspected on the schedule outlined in Section 8-01.3(1)B for damage and sediment deposits. Damage to or undercutting of BMPs shall be repaired immediately.

In areas where the Contractor’s activities have compromised the erosion control functions of the existing grasses, the Contractor shall overseed at no additional cost to the Contracting Agency.

The quarry spalls of construction entrances shall be refreshed, replaced, or screened to maintain voids between the spalls for collecting mud and dirt.

Unless otherwise specified, when the depth of accumulated sediment and debris reaches approximately ⅓ the height of the BMP the deposits shall be removed. Debris or contaminated sediment shall be disposed of in accordance with Section 2-03.3(7)C. Clean sediments may be stabilized on-site using BMPs as allowed by the Engineer.

8-01.3(16) Removal

This section is revised to read:

The Contractor shall remove all temporary BMPs, all associated hardware and associated accumulated sediment deposition from the project limits prior to Physical Completion unless otherwise allowed by the Engineer. When the temporary BMP materials are made of natural plant fibers unaltered by synthetic materials the Engineer may allow leaving the BMP in place.

The Contractor shall remove BMPs and associated hardware in a way that minimizes soil disturbance. The Contractor shall permanently stabilize all bare and disturbed soil after removal of BMPs. If the installation and use of the erosion control BMPs have compacted or otherwise rendered the soil inhospitable to plant growth, such as construction entrances, the Contractor shall take measures to rehabilitate the soil to facilitate plant growth. This may include, but is not limited to, ripping the soil, incorporating soil amendments, or seeding with the specified seed.

At the request of the Contractor and at the sole discretion of the Engineer the CSWGP may be transferred back to the Contracting Agency. Approval of the Transfer of Coverage request will require the following:

1. All other Work required for Contract Completion has been completed.

2. All Work required for compliance with the CSWGP has been completed to the maximum extent possible. This includes removal of BMPs that are no longer needed and the site has undergone all Stabilization identified for meeting the requirements of Final Stabilization in the CSWGP.

3. An Equitable Adjustment change order for the cost of Work that has not been completed by the Contractor.

4. Submittal of the Washington State Department of Ecology Transfer of Coverage form (Ecology form ECY 020-87a) to the Engineer.

If the Engineer approves the transfer of coverage back to the Contracting Agency, the requirement in Section 1-07.5(3) for the Contractor's submittal of the Notice of Termination form to the Washington State Department of Ecology will not apply.

8-01.4 Measurement

This section's content is deleted and replaced with the following new subsections:

8-01.4(1) Lump Sum Bid for Project (No Unit Items)

When the Bid Proposal contains the item “Erosion Control and Water Pollution Prevention” there will be no measurement of unit or force account items for Work defined in Section 8-01 except as described in Sections 8-01.4(3) and 8-01.4(4). Also, except as described in Section 8-01.4(3), all of Sections 8-01.4(2) and 8-01.5(2) are deleted.

8-01.4(2) Item Bids

When the Proposal does not contain the items “Erosion Control and Water Pollution Prevention”, Section 8-01.4(1) and 8-01.5(1) are deleted and the Bid Proposal will contain some or all of the following items measured as noted.

ESC lead will be measured per day for each day that an inspection is made and a report is filed.

Erosion control blanket and plastic covering will be measured by the square yard along the ground slope line of surface area covered and accepted.

Turbidity curtains will be measured by the linear foot along the ground line of the installed curtain.

Check dams will be measured per linear foot one time only along the ground line of the completed check dam. No additional measurement will be made for check dams that are required to be rehabilitated or replaced due to wear.

Stabilized construction entrances will be measured by the square yard by ground slope measurement for each entrance constructed.

Tire wash facilities will be measured per each for each tire wash installed.

Street cleaning will be measured by the hour for the actual time spent cleaning pavement, refilling with water, dumping and transport to and from cleaning locations within the project limits, as authorized by the Engineer. Time to mobilize the equipment to or from the project limits on which street cleaning is required will not be measured.

Inlet protections will be measured per each for each initial installation at a drainage structure.

Silt fence, gravel filter, compost berms, and wood chip berms will be measured by the linear foot along the ground line of the completed barrier.

Wattles and compost socks will be measured by the linear foot.

Temporary curbs will be measured by the linear foot along the ground line of the completed installation.

Temporary pipe slope drains will be measured by the linear foot along the flow line of the pipe.

Coir logs will be measured by the linear foot along the ground line of the completed installation.

Outlet protections will be measured per each initial installation at an outlet location.

Temporary seeding, temporary mulching, and tackifiers will be measured by the acre by ground slope measurement.

Compost blanket will be measured by the square yard by ground slope surface area covered and accepted.

8-01.4(3) Reinstating Unit Items with Lump Sum Erosion Control and Water Pollution Prevention

The Contract Provisions may establish the project as lump sum, in accordance with Section 8-01.4(1) and also include one or more of the items included above in Section 8-01.4(2). When that occurs, the corresponding measurement provision in Section 8-01.4(2) is not deleted and the Work under that item will be measured as specified.

8-01.4(4) Items not included with Lump Sum Erosion Control and Water Pollution Prevention

Compost blanket will be measured by the square yard by ground slope surface area covered and accepted.

Temporary mulch will be measured by the acre by ground slope surface area covered and accepted.

High visibility fence will be measured by the linear foot along the ground line of the completed fence.

8-01.5 Payment

This section's content is deleted and replaced with the following new subsections:

8-01.5(1) Lump Sum Bid for Project (No Unit Items)

Payment will be made for the following Bid item when it is included in the Proposal:

"Erosion Control and Water Pollution Prevention", lump sum.

The lump sum Contract price for "Erosion Control and Water Pollution Prevention" shall be full pay to perform the Work as described in Section 8-01 except for costs compensated by Bid Proposal items inserted through Contract Provisions as described in Section 8-01.4(2). Progress payments for the lump sum item "Erosion Control and Water Pollution Prevention" will be made as follows:

1. The Contracting Agency will pay 15 percent of the bid amount for the initial set up for the item. Initial set up includes the following:

    a. Acceptance of the TESC Plan provided by the Contracting Agency or submittal of a new TESC Plan,

    b. Submittal of a schedule for the installation of the BMPs, and

    c. Identifying water quality sampling locations.

2. 70 percent of the bid amount will be paid in accordance with Section 1-09.9.

3. Once the project is physically complete and copies of the all reports submitted to the Washington State Department of Ecology have been submitted to the Engineer, and, if applicable, transference of the CSWGP back to the Contracting Agency is complete, the remaining 15 percent of the bid amount shall be paid in accordance with Section 1-09.9.

8-01.5(2) Item Bids

"ESC Lead", per day.

"Turbidity Curtain", per linear foot.

"Erosion Control Blanket", per square yard.

"Plastic Covering", per square yard.

"Check Dam", per linear foot.

"Inlet Protection", per each.

"Gravel Filter Berm", per linear foot.

"Stabilized Construction Entrance", per square yard.

"Street Cleaning", per hour.

"Silt Fence", per linear foot.

"Wood Chip Berm", per linear foot.

"Compost Berm", per linear foot.

"Wattle", per linear foot.

"Compost Sock", per linear foot.

"Coir Log", per linear foot.

"Temporary Curb", per linear foot.

"Temporary Pipe Slope Drain", per linear foot.

"Temporary Seeding", per acre.

"Temporary Mulching", per acre.

"Compost Blanket", per square yard.

"Outlet Protection", per each.

"Tackifier", per acre.

"Erosion/Water Pollution Control", by force account as provided in Section 1-09.6.

Maintenance and removal of erosion and water pollution control devices including removal and disposal of sediment, stabilization and rehabilitation of soil disturbed by these activities, and any additional Work deemed necessary by the Engineer to control erosion and water pollution will be paid by force account in accordance with Section 1-09.6.

To provide a common Proposal for all Bidders, the Contracting Agency has entered an amount in the Proposal to become a part of the Contractor's total Bid.

8-01.5(3) Reinstating Unit Items with Lump Sum Erosion Control and Water Pollution Prevention

The Contract may establish the project as lump sum, in accordance with Section 8-01.4(1) and also reinstate the measurement of one or more of the items described in Section 8-01.4(2), except for Erosion/Water Pollution Control, by force account. When that occurs, the corresponding payment provision in Section 8-01.5(2) is not deleted and the Work under that item will be paid as specified.

8-01.5(4) Items not included with Lump Sum Erosion Control and Water Pollution Prevention

Payment will be made for the following Bid item when it is included in the Proposal:

"High Visibility Fence", per linear foot.

8-02.AP8

Section 8-02, Roadside Restoration
April 1, 2019

This section, including all subsections, is revised to read:

8-02.1 Description

This Work consists of preserving, maintaining, establishing and augmenting vegetation on the roadsides and within mitigation or sundry site areas. It includes vegetation preservation, weed and pest control, furnishing and placing topsoil, compost, and soil amendments, and furnishing and planting seed, sod and plants of all forms and container types. It includes performing plant establishment activities and soil bioengineering. Work shall be performed in accordance with these Specifications and as shown in the Plans or as designated by the Engineer.

Trees, whips, shrubs, ground covers, cuttings, live stakes, live poles, live branches, rhizomes, tubers, rootstock, and seedlings will hereinafter be referred to collectively as "plants" or "plant material". Grass, wildflowers, and other plant materials installed in seed form will hereinafter be referred to collectively as "seed".

8-02.2 Materials

Materials shall meet the requirements of the following sections:

Erosion Control and Roadside Planting	9-14
Water	9-25.2

Botanical identification and nomenclature of plant materials shall be based on descriptions by Hitchcock and Cronquist in “Flora of the Pacific Northwest”. Botanical identification and nomenclature of plant material not found in "Flora" shall be based on Bailey in “Hortus Third” or superseding editions and amendments or as referenced in the Plans.

8-02.3 Construction Requirements

8-02.3(1) Responsibility During Construction

The Contractor shall prepare, install, and ensure adequate and proper care of all roadside seeded, planted, and lawn areas on the project until all plant establishment periods required by the Contract are complete or until Physical Completion of the project, whichever is last.

Adequate and proper care shall include, but is not limited to, keeping all plant material in a healthy, growing condition by watering, pruning, and other actions deemed necessary for plant health. This Work shall include keeping the project area free from insect infestation, weeds or unwanted vegetation, litter, and other debris along with retaining the finished grades and mulch in a neat uniform condition.

Existing desirable vegetation shall be saved and protected unless removal is required by the Contract or allowed by the Engineer.

The Contractor shall have sole responsibility for the maintenance and appearance of the roadside restoration.

8-02.3(2) Work Plans

Three Work Plan submittals exist under this Section:

1. Roadside Work Plan: This plan is required when Work will disturb the roadside beyond 20 feet from the pavement or where trees or native vegetation will be removed, the Contractor shall submit a Type 2 Working Drawing.

2. Weed and Pest Control Plan: This plan is required when the proposal contains the item "Weed and Pest Control," and prior to application of any chemicals or weed control activities, the Contractor shall submit a Type 2 Working Drawing.

3. Plant Establishment Plan: This plan is required when the proposal contains the item "PSIPE__", and prior to completion of Initial Planting, the Contractor shall submit a Type 2 Working Drawing.

8-02.3(2)A Roadside Work Plan

The Roadside Work Plan shall define the expected impacts to the roadside and restoration resulting from Work necessary to meet all Contract requirements. The Contractor shall define how the roadside restoration Work included in the Contract will be phased and coordinated with project Work such as earthwork, staging, access, erosion and water pollution control, irrigation, etc. The Roadside Work Plan shall include the following:

1. Limiting impacts to roadsides:

    a. Limits of Work including locations of staging or parking.

    b. Means and methods for vegetation protection (in accordance with Section 1-07.16(2)).

    c. Locations outside of clearing limits where vegetation shall be removed to provide access routes or other needs to accomplish the Work.

    d. Plans for removal, preservation and stockpile of topsoil or other native materials, if outside of clearing and grubbing limits and within the project limits.

2. Roadside Restoration:

    a. Plan for propagation and procurement of plants, ground preparation for planting, and installation of plants.

    b. Means and methods to limit soil compaction where seeding and planting are to occur, such as steel plates, hog fuel access roads, wood mats for sensitive areas (including removal) and decompaction for unavoidable impacts.

    c. Plan and timing to incorporate or remove erosion control items.

3. Lawn Installation:

    a. Schedule for lawn installation work.

    b. Establishment and maintenance of lawns.

8-02.3(2)B Weed and Pest Control Plan

The Weed and Pest Control Plan shall describe all weed and pest control needs for the project.

The plan shall be prepared and signed by a licensed Commercial Pest Control Operator or Consultant. The plan for control of weeds and pests on the Contract in accordance with Section 8-02.3(3) shall include the following:

1. Names of plan preparer and pesticide operators, including contact information. The Contractor shall furnish the Engineer evidence that all operators are licensed with appropriate endorsements, and that the pesticide used is registered for use by the Washington State Department of Agriculture.

2. Means and methods of weed control, including mechanical and/or chemical.

3. Schedule for weed control including re-entry times for pesticide application by pesticide type.

4. Proposed pesticide use in accordance with Section 8-02.3(3)A: name, application rate, and Safety Data Sheets of all proposed pesticides. Include a copy of the current product label for each pesticide to be used.

5. Plan to ensure worker safety until pesticide re-entry periods are met.

8-02.3(2)C Plant Establishment Plan

The Plant Establishment Plan shall describe activities necessary to ensure continued health and vigor of planted and seeded areas in accordance with the requirements of Sections 8-02.3(12) and 8-02.3(13). Should the plan become unworkable at any time during the first-year plant establishment, the Contractor shall submit a revised plan prior to proceeding with further Work. The Plant Establishment Plan shall include:

1. Proposed scheduling of joint inspection meetings, activities, materials, equipment to be utilized for the first-year plant establishment.

2. Proposed adaptive management activities to ensure successful establishment of seeded, sodded, and planted areas.

3. A contact person.

4. Management of the irrigation system, when applicable.

8-02.3(3) Weed and Pest Control

The Contractor shall control weed and pest species within the project limits using integrated pest management principles consisting of mechanical, biological, and chemical controls that are outlined in the Weed and Pest Control Plan or as designated by the Engineer. Controlling weeds consists of killing and removing weeds by chemical, mechanical, and hand methods.

8-02.3(3)A Chemical Pesticides

Chemical pesticides include, but are not restricted to, any substance or mixture of substances intended for preventing, destroying, repelling or mitigating any pest, including but not limited to, insecticides, herbicides, fungicides, adjuvants, and additives, including plant regulators, defoliants and desiccants. The Contractor shall apply chemical pesticides in accordance with the label recommendations, the Washington State Department of Ecology, local sensitive area ordinances, and Washington State Department of Agriculture laws and regulations. Only those pesticides listed in the table Herbicides Approved for Use on WSDOT Rights of Way and accepted as part of the Weed and Pest Control Plan or by written authorization from the Engineer may be used (www.wsdot.wa.gov/maintenance/roadside/herbicide_use.htm).

The applicator shall be licensed by the State of Washington as a Commercial Applicator or Commercial Operator, with additional endorsements as required by the Special Provisions or the proposed weed control plan. All chemical pesticides shall be delivered to the job site in the original containers, or if pre-mixed off-site, a certification of the components and formulation from the

supplier is required. The licensed applicator or operator shall complete WSDOT Form 540-509, Commercial Pesticide Application Record, each day the pesticide is applied and furnish a copy to the Engineer by the following business day.

The Contractor shall ensure confinement of the chemicals within the designated areas. The use of spray chemical pesticides shall require the use of anti-drift and activating agents and a spray pattern indicator unless otherwise allowed by the Engineer.

The Contractor shall assume all responsibility for rendering any area unsatisfactory for planting by reason of chemical application. Damage to adjacent areas, either on or off the Highway Right of Way, shall be repaired to the satisfaction of the Engineer or the property owner at no additional cost to the Contracting Agency.

8-02.3(3)B Planting and Lawn Area Weed Control

Planting and lawn area weed control consists of controlling weeds and pests in planted and lawn areas shown in the Plans. This Work is included in the bid items for planting and lawn installation.

All planting and lawn areas shall be prepared so that they are weed and debris free at the time of planting and until completion of the project. The planting areas shall include the entire ground surface, regardless of cover, areas around plants, and those areas shown in the Plans.

Within planting or lawn areas, all species that are not shown in the Plans are unwanted and shall be controlled unless specifically allowed by the Engineer to remain.

Grass growing within the mulch ring of a plant, including grass applied in accordance with Sections 8-01.3(2)A1, 8-02.3(9) or 8-02.3(10), shall be considered a weed and shall be controlled on the project in accordance with the weed and pest control plan.

All applications of post-emergent herbicides shall be made while green and growing tissue is present. Residual herbicides shall not be used where rhizomatous species or perennial species are indicated.

Should unwanted vegetation reach the flowering and seed stage in violation of these Specifications, the Contractor shall physically remove and bag the seed heads prior to seed dispersion. All physically removed vegetation and seed heads shall be disposed of off-site at no cost to the Contracting Agency.

8-02.3(3)C Project Area Weed and Pest Control

The Contractor shall control weeds not otherwise covered in accordance with Section 8-02.3(3)B, in all areas within the project limits, including erosion control seeding areas and vegetation preservation areas, as designated by the Engineer.

When the Bid Item “Project Area Weed and Pest Control” is included in the Contract, the Contractor shall also control all weeds specified as noxious by

the Washington State Department of Agriculture, the local Weed District, or the County Noxious Weed Control Board outside of planting areas within the project limits.

8-02.3(4) Topsoil

Topsoil shall not be worked or placed when the ground or topsoil is frozen, or excessively wet.

The Contractor shall protect topsoil stockpiled for project use to prevent erosion and weed growth. Weed growth on topsoil stockpile sites shall be immediately eliminated in accordance with the accepted Weed and Pest Control Plan and Section 8-02.3(3)C.

The subsoil where topsoil is to be placed shall be tilled to a depth of 1 foot or as specified in the Special Provisions or the Plans. Topsoil of the type specified shall be evenly spread over the specified areas to the depth shown in the Plans or as otherwise ordered by the Engineer. Topsoil depths greater than 6 inches shall be placed in lifts no more than 6 inches in depth. The first lift of topsoil shall be incorporated with sub-soil to a depth of 8 inches and subsequent lifts placed and lightly tamped between lifts. After the topsoil has been spread, all large clods, hard lumps, and rocks 2 inches in diameter and larger, and litter shall be raked up, removed, and disposed.

8-02.3(4)A Topsoil Type A

Topsoil Type A shall be as specified in the Special Provisions. The Contractor shall submit a certification by the supplier that the contents of the Topsoil meet the requirements in the Special Provisions.

8-02.3(4)B Topsoil Type B

Topsoil Type B shall be naturally occurring topsoil taken from within the project limits and shall meet the requirements of Section 9-14.1(2). Topsoil Type B shall be taken from areas shown in the Plans to the designated depth and stockpiled at locations that will not interfere with the construction of the project, and outside of sensitive areas, as allowed by the Engineer. A minimum of two weeks prior to excavation of Topsoil Type B, the Contractor shall pre-treat the vegetation on the designated Topsoil Type B areas according to the Weed and Pest Control Plan. Areas beyond the slope stakes shall be disturbed as little as possible in the above operations and under no circumstances shall Topsoil Type B be stockpiled within 10 feet of any existing tree or vegetation area designated to be saved and protected. The Contractor shall protect topsoil stockpile from weed infestation.

The Contractor shall set aside sufficient material to satisfy the needs of the project.

Upon completion of topsoil placement, the Contractor shall dispose of remaining stockpiled Topsoil Type B not required for use on the project at no additional expense to the Contracting Agency in accordance with Section 2-03.3(7)C.

Should a shortage of Topsoil Type B occur, and the Contractor has wasted or otherwise disposed of topsoil material, the Contractor shall furnish Topsoil Type A or C at no additional expense to the Contracting Agency.

8-02.3(4)C Topsoil Type C

Topsoil Type C shall be naturally occurring topsoil obtained from a source provided by the Contractor outside of the Contracting Agency-owned Right of Way. Topsoil Type C shall meet the requirements of Sections 8-02.3(4)B and 9-14.1(3). The Contractor shall not begin removal of Topsoil Type C from the proposed source until the material has been allowed for use by the Engineer.

8-02.3(5) Roadside Seeding, Lawn and Planting Area Preparation

This Work includes preparing worked areas for the installation of all types of permanent erosion control planting. Work shall be conducted so the flow lines in drainage channels are maintained. Material displaced by the Contractor's operations that interferes with drainage shall be removed from the channel and disposed of as allowed by the Engineer.

8-02.3(5)A Seeding Area Preparation

The Contractor shall prepare roadside seeding areas as follows:

1. Remove all excess material, debris, stumps, and rocks greater than 3 inches in diameter from areas to be seeded. Dispose of removed materials offsite.

2. Prepare roadside seeding area to a weed free and bare condition.

3. Bring area to uniform grade and install topsoil, soil amendments, or compost as specified. Any slopes 3(H) to 1(V) or steeper shall not be tilled unless otherwise specified.

4. Compact to provide a reasonably firm but friable seedbed; tractor walk to uniformly cover the surface with longitudinal depressions at least 2 inches deep formed perpendicular to the natural flow of water on the slope. Condition the soil with sufficient water so the longitudinal depressions remain in the soil surface until completion of the seeding.

5. Seed and mulch within 2 days of preparation.

8-02.3(5)B Lawn Area Preparation

The Contractor shall prepare lawn areas as follows:

1. Prepare lawn area to a weed free and bare condition in accordance with Section 8-02.3(3)B.

2. Remove excess material, stumps, wood or rocks over 3 inches in diameter and remove from site.

3. Bring area to uniform grade and install topsoil or soil amendments in accordance with Section 8-02.3(4) and 8-02.3(6).

4. Till to an 8-inch depth, rake to a smooth even grade without low areas that trap water, and compact with a 50-pound roller. The finished grade of the soil shall be 1 inch below the top of all curbs, junction and valve boxes, walks, driveways, and other Structures.

5. Seed or sod the area within two days of preparation.

8-02.3(5)C Planting Area Preparation

The Contractor shall prepare planting areas as follows:

1. Prepare planting area to a weed free and bare condition in accordance with Section 8-02.3(3)B.

2. Decompact soil to a depth of 18 inches where construction activities have taken place or where native soils are compacted.

3. Return soil to uniform grade even with surrounding areas, leaving no holes or mounds over 3 inches in depth or height.

4. Remove excess material, stumps, wood or rocks over 3 inches in diameter and remove from site.

5. Apply compost or other amendments as indicated in the plans and in accordance with Section 8-02.3(6).

6. Cultivate amendments to a depth of 12 inches to provide a reasonably firm but friable planting area. Do not till any slopes 3(H) to 1(V) or steeper.

7. Return soil to a uniform finished grade, 1 inch, or the specified depth of mulch plus 1 inch, below walks, curbs, junction and valve boxes, catch basins, and driveways, unless otherwise specified.

8. Begin planting and mulching the area within two days of final preparation.

8-02.3(6) Soil Amendments

The Contractor shall place soil amendments of the type, quality, and quantities specified where shown in the Plans or as specified in the Special Provisions. Areas receiving soil amendments shall be bare soil or vegetation free prior to application. All soil amendments shall be installed as shown in the Plans within 30 calendar days after delivery to the project site.

8-02.3(6)A Compost

Compost used for soil amendments shall be Fine Compost unless otherwise designated in the Plans. When compost blanket is used for temporary erosion control, the compost blanket may be incorporated into the soil immediately prior to planting when used as compost soil amendment. The area shall be prepared in accordance with Section 8-02.3(5) prior to placing compost.

8-02.3(6)B Fertilizers

The Contractor shall apply fertilizer in the form, mixture, and rate specified in the Special Provisions or as directed by the Engineer. Application procedures shall be in accordance with the manufacturer's recommendations unless otherwise specified in the Special Provisions.

The Contractor shall submit a guaranteed fertilizer analysis label for the selected product a minimum of one week prior to application for acceptance. Following the Engineer's acceptance, fertilizing of the accepted ground or vegetated surfaces shall begin immediately.

In seeding and lawn areas to be fertilized, the fertilizer shall be applied concurrently with the seed. When fertilizer is hydraulically applied, the fertilizer shall be suitable for application with seeding as specified in Section 8-02.3(9)C. If hydroseeding, the fertilizer shall be placed in the hydroseeder tank no more than 1 hour prior to application.

Fertilizers for planting areas shall be applied concurrently with compost and applied prior to incorporation, unless tablet form fertilizer is specified. Where tablet form fertilizer is specified, fertilizer shall be applied concurrently with plant installation.

Fertilizer sprayed on signs or sign structures shall be removed the same day.

Areas not accessible by fertilizing equipment shall be fertilized by allowed hand methods.

Second Application: A second application of fertilizer shall be applied as specified in the Special Provisions at the locations designated in the Plans. The fertilizer shall be applied during the months of March, April, or May of the following year after the initial seeding, planting, or lawn installation. The fertilizer shall be dry granular pellets or pearls and applied in accordance with the manufacturer's recommendations or as specified in the Special Provisions.

8-02.3(7) Layout of Planting, Lawn and Seeding Areas

The Contractor shall lay out and prepare planting and lawn areas and receive the Engineer's acceptance of layout and preparation prior to any installation activities. The Contractor shall stake the location of all trees larger than 1-inch caliper and the perimeter of all planting areas for acceptance by the Engineer prior to any installation activities.

The Contractor shall locate all trees to be planted in mowable grass areas a minimum of 10 feet from the edge of planting areas, other trees, fence lines, and bottom of ditches unless otherwise specified.

Tree locations shown in the Plans shall be considered approximate unless shown with stationing and offset distance. In irrigated areas, trees shall be located so their trunk is a minimum of ⅓ of the spray radius away from the nearest sprinkler head.

Unless otherwise shown, planting areas located adjacent to Roadways shall begin 6 feet from the edge of shoulder on roadway fills and begin 5 feet up on the back slope from the bottom on roadway cut sections. Plants within planting areas shall

be located such that mature branching pattern will not block sight distance, signs, or other traffic-related devices. No trees shall be placed where the mature canopy will grow to within 10 feet of existing power lines. Where roadside ditches are present, planting areas shall begin 5 feet from the centerline of the ditch unless shown otherwise in the Plans.

8-02.3(8) Planting

8-02.3(8)A Dates and Conditions for Planting

No plant material shall be planted until it has been inspected and accepted for planting by the Engineer. Rejected material shall be removed from the project site immediately. All plants for the project or a sufficient quantity to plant 1-acre of the site, whichever is less, shall be received on site prior to the Engineer beginning inspection of the plants.

Under no circumstances will planting be permitted during unsuitable soil or weather conditions as determined by the Engineer. Unsuitable conditions may include frozen soil, freezing weather, saturated soil, standing water, high winds, heavy rains, and high water levels. The ground shall be moist at the time of planting. All planting shall be accomplished during the following periods:

1. Non-Irrigated Plant Material
   Western Washington (West of the Cascade Mountain Crest) – October 1 to March 1.
   Eastern Washington (East of the Cascade Mountain Crest) – October 1 to November 15.

2. Irrigated Plant Material

   In irrigated areas, plant material shall not be installed until the irrigation system is fully operational and accepted by the Engineer. Trees and shrubs may be planted in irrigated areas during the non-irrigated planting window before the irrigation system is functional with the written concurrence of the Engineer only if the irrigation system is guaranteed to be operational prior to the end of the non-irrigated planting window.

8-02.3(8)B Plant Installation

The Contractor shall handle plant material in the following manner:

1. Root systems shall be kept covered and damp at all times. Plant material shall be kept in containers until the time of planting.

2. Roots shall not be bunched, curled, twisted, or unreasonably bent when placed in the planting hole. Bare root plant material shall be dormant at the time of harvesting and planting. The root systems of all bare root plant material shall be dipped in a slurry immediately prior to planting.

3. Plant material supplied in wrapped balls shall not be removed from the wrapping until the time of planting at the planting location. The root system of balled plant material shall be moist at the time of planting. Root balls shall be loosened prior to planting. All burlap,

baskets, string, wire and other such materials shall be removed from the hole when planting balled plants.

4. Plant cutting material shall be dormant at the time of cutting and planting. All cuttings shall be installed immediately if buds begin to swell.

5. Plants shall be placed with the crown at the finished grade. In their final position, plants shall have their top true root (not adventitious root) no more than 1 inch below the soil surface, no matter where that root was located in the original root ball or container. The backfill material, including container and root ball soil, shall be thoroughly watered on the same day that planting occurs regardless of season.

When installing plants, the Contractor shall dig planting holes three times the diameter of the container or root ball size. Any glazed surface of the planting hole shall be roughened prior to planting.

8-02.3(8)C Pruning, Staking, Guying, and Wrapping

Plants shall be pruned at the time of planting, only to remove minor broken or damaged twigs, branches or roots. Pruning shall be performed with a sharp tool and shall be done in such a manner as to retain or to encourage natural growth characteristics of the plants. All other pruning shall be performed only after the plants have been in the ground at least 1 year and when plants are dormant.

Trees shall only be staked when so noted in the Plans. Each tree shall be staked or guyed before completion of the backfilling in accordance with the details shown in the Plans.

Trees shall be wrapped when so noted in the Plans.

8-02.3(9) Seeding, Fertilizing, and Mulching

For all seed, the Contractor shall furnish the following documentation to the Engineer:

1. The state or provincial seed dealer license and endorsements.

2. Copies of Washington State Department of Agriculture (WSDA) test results on each lot of seed. Test results shall be within six months prior to the date of application.

8-02.3(9)A Dates for Application of Seed

Unless otherwise allowed by the Engineer, the Contractor shall apply seed for permanent erosion control during the following periods:

Western Washington[1] (West of the Cascade Mountain Crest)	Eastern Washington (East of the Cascade Mountain Crest)
March 1 through May 15 September 1 through October 1	October 1 through November 15
[1]Seeding may be allowed outside these dates when allowed by the	

Engineer.

All roadway excavation and embankment ground surfaces that are completed to final grades shall be prepared and seeded during the first available seeding window. When environmental conditions are not conducive to satisfactory results, the Engineer may suspend the seeding Work until such time that the desired results are likely to be obtained. If seeding is suspended, temporary erosion control methods according to Section 8-01 shall be used to protect the bare soil until seeding conditions improve.

8-02.3(9)B Seeding and Fertilizing

The Contractor shall prepare the seeding area in accordance with Section 8-02.3(5)A and apply seed at the rate and mix specified in the Special Provisions. The Contractor shall notify the Engineer within 5 days in advance of any seeding operation and shall not begin the Work until areas prepared or designated for seeding have been accepted. Following the Engineer's acceptance, seeding of the accepted ground surfaces shall begin immediately.

Seeding shall not be done during windy weather or when the ground is frozen, or excessively wet.

When seeding by hand, the seed shall be incorporated into the top ¼ inch of soil by hand raking or other method that is allowed by the Engineer.

Seed applied as a separate operation using a hydroseeder shall have a tracer added to visibly aid uniform application. The tracer shall be HECP Short-Term Mulch applied at a rate of 200 to 250 pounds per acre and the tracer shall carry the measured specified seeding rate.

8-02.3(9)C Seeding with Fertilizers and Mulches

When the Proposal includes any variation of seeding, fertilizing, and without mulching, the seed and fertilizer shall be applied in one application followed by mulching. West of the Cascade Mountains, seed, fertilizer, and mulch may be completely applied in one application. East of the Cascades, seeding, fertilizing, and mulching shall not be applied as a single application unless allowed by the Engineer in writing prior to application. The fertilizing and mulching shall meet the requirements of Sections 8-02.3(6) and 8-02.3(11).

8-02.3(9)D Inspection

Seeded areas will be inspected upon completion of seeding, fertilizing, and mulching. The Work in any area will not be measured for payment until a uniform distribution of the materials is accomplished at the specified rate. Areas that have not received a uniform application of seed, fertilizer, and mulch at the specified rate, as determined by the Engineer, shall be re-seeded, re-fertilized, or re-mulched prior to payment for seeding within a designated area.

8-02.3(9)E Protection and Care of Seeded Areas

The Contractor shall install and establish a stable and weed free stand of grass as specified within all designated permanent seeding areas. A stable stand of grass shall meet the following requirements:

1. A dense and uniform canopy cover, 70% for Western Washington and 50% for Eastern Washington, of specified species covers all seeded areas after 3 months of active growth following germination during the growing season. Canopy cover is defined as the cover of living and vigorous grass blades, leaves, and shoots of specified species. Volunteer species, weeds, woody plants, or other undesirable vegetation shall not factor into the canopy cover. Growth and establishment may require supplemental irrigation to meet cover requirements.

2. Stand health is evident by vigorously growing planted species having a uniform rich-green appearance and with no dead patches or major gaps of growth. A stand of grass that displays rusting, wilting, stunted growth, disease, yellowing or browning of leaves, or bare patches does not meet the stand health requirement.

3. The Contractor shall establish a stable stand of grass free of all weeds, non-specified grasses, and other undesirable vegetation. Weed control shall be in accordance with the Weed and Pest Control Plan and occur on a monthly basis during the establishment period and through the life of the Contract.

4. Remove all trash, rocks, construction debris, and other obstructions that may be detrimental to the continued establishment of future seeding.

In addition to the requirements of Section 1-07.13(1), restoration of eroded areas including clean up, removal, and proper disposal of eroded material, filling and raking of eroded areas with Topsoil Type A or fine compost, and re-application of the specified seed, fertilizer, and mulch shall occur at no additional cost to the Contracting Agency.

8-02.3(10) Lawn Installation

8-02.3(10)A Dates and Conditions for Lawn Installation

In irrigated areas, lawn installation shall not begin until the irrigation system is fully operational.

Unless otherwise allowed by the Engineer, seeded lawn installation shall be performed during the following time periods at the location shown:

Western Washington (West of the Cascade Mountain Crest)	Eastern Washington (East of the Cascade Mountain Crest)
March 1 through May 15 September 1 through October 1	October 1 through November 15
When irrigation system is operational March 1 through October 1	When irrigation system is operational March 1 through November 1

8-02.3(10)B Lawn Seeding and Sodding

The Contractor shall prepare the lawn area in accordance with Section 8-02.3(5) and apply seed at the mix and rate of application as specified in the Special Provisions.

The Contractor shall have the option of sodding in lieu of seeding for lawn installation at no additional expense to the Contracting Agency. Seeding in lieu of sodding will not be allowed.

Seed placed by hand shall be raked into the soil. Following raking, the seeded soil shall be rolled with a smooth 50-pound roller. Sod strips shall be placed within 48 hours of being cut. Placement shall be without voids and have the end joints staggered. Following placement, the sod shall be rolled with a smooth roller to establish contact with the soil.

Barriers shall be erected, with warning signs where necessary, to preclude pedestrian traffic access to the newly placed lawn during the establishment period.

8-02.3(10)C Lawn Establishment

Lawn establishment shall consist of caring for all new lawn areas within the limits of the project.

The lawn establishment period shall begin immediately after the lawn seeding or sodding has been accepted by the Engineer and shall extend to the end of four mowings or 20 working days whichever is longer. The mowings shall be done in accordance with Section 8-02.3(10)D.

During the lawn establishment period, the Contractor shall ensure the continuing healthy growth of the turf. This care shall include keeping the project in a presentable condition including, but not limited to, removal of litter, mowing, trimming, removal of grass clippings, edging, fertilization, insecticide and fungicide applications, weed control, watering, repairing the irrigation system, and repair and reseeding all damaged areas.

Temporary barriers shall be removed only when directed by the Engineer.

All Work performed under lawn establishment shall comply with established turf management practices.

Acceptance of lawn planting as specified will be based on a uniform stand of grass and a uniform grade at the time of final inspection. The Contractor shall recultivate, re-grade, reseed, and refertilize areas that are bare or have a poor stand of grass or not having a uniform grade through any cause before final inspection at no additional cost to the Contracting Agency.

8-02.3(10)D Lawn Mowing

Lawn mowing shall begin immediately after the lawn establishment period has been accepted by the Engineer and shall extend to the end of the Contract or the first-year plant establishment, whichever is last.

The Contractor shall accomplish the following minimum requirements:

1. Mow, trim, and edge as often as conditions dictate, at a minimum, once per week between April and September. Maximum height of lawn shall not exceed 3 inches. The cutting height shall be 2 inches.

Cuttings, trimmings, and edgings shall be disposed of off the project site. When the Engineer allows the use of a mulching mower, trimmings may be left in place.

2. Water as often as conditions dictate depending on weather and soil conditions.

3. Provide fertilizer, weed control, water, and other measures as necessary to establish and maintain a healthy stand of grass.

8-02.3(11) Mulch

Mulches associated with seeding and planting shall be of the type specified in the Special Provisions or as indicated in the Plans. The Contractor shall evenly apply mulch at the rates indicated in the Plans. Mulches shall not be placed below the anticipated water level of ditch slopes, pond bank slopes, and stream banks, or in areas of standing or flowing water.

8-02.3(11)A Mulch for Seeding Areas

The Contractor shall furnish and evenly apply Hydraulically Applied Erosion Control Product (HECP) Long Term Mulch at the rates indicated and in accordance with the Manufacturer's specifications unless otherwise specified.

HECP Long Term Mulch shall be hydraulically applied at the rate of 3500 pounds per acre with no more than 2000 pounds applied in any single lift. HECP mulch shall not be used within the Ordinary High Water Mark.

Mulch sprayed on signs or sign Structures shall be removed the same day.

Areas not accessible by mulching equipment shall be mulched by accepted hand methods.

HECP Long Term Mulch may be applied with seed and fertilizer west of the summit of the Cascade Range. East of the summit of the Cascade Range, seed and fertilizer shall be applied in a single application followed by the application of mulch.

8-02.3(11)B Bark or Woodchip Mulch

The Contractor shall apply bark or wood chip mulch of the type and depth specified where shown in the Plans or as specified in the Special Provisions.

The Contractor shall complete final grading and placement/incorporation of soil amendments within the planting area prior to placement of mulch. Areas receiving bark mulch shall be bare soil or vegetation free before application, except where trees and other plants are specifically identified in the Plans or designated by the Engineer to be saved and protected.

Bark or wood chip mulch shall be placed to a uniform non-compacted depth of 3 inches over all planting areas unless otherwise specified. Mulch shall be feathered to the base of the plant and 1 inch below the top of junction and valve boxes, curbs, and pavement edges.

Any contamination of the mulch due to the Contractor's operations shall be corrected to its former condition at no additional cost to the Contracting Agency. Mulch placed to a thickness greater than specified shall be at no additional cost to the Contracting Agency.

The Contractor shall keep plant material crowns, runners, and branches free of mulch at all times.

8-02.3(11)C Bark or Woodchip Mulch Rings

The Contractor shall apply mulch rings around plants installed within existing vegetation areas or within seeded areas as shown in the Plans. Bark or wood chip mulch rings shall be applied to the surface of vegetation free amended soil in the isolated plant locations where shown in the Plans or as specified in the Special Provisions. Bark or wood chip mulch shall be placed to a uniform non-compacted depth of 3 inches to a radius of 2 feet around all plants within interplanted plant locations.

8-02.3(12) Completion of Initial Planting

Upon completion of the initial planting within a designated area, the Engineer will make an inspection of all planting areas. The Engineer will notify the Contractor, in writing, of any replacements or corrective action necessary to meet the plant installation requirements. The Contractor shall replace all plants and associated materials rejected or missing and correct unsatisfactory conditions.

Completion of the initial planting within a designated area includes the following conditions:

1. 100 percent of each of the plant material categories are installed as shown in the Plans.

2. Planting Area is cleaned up.

3. Repairs are completed, including but not limited to, full operation of the irrigation system.

4. Mulch coverage is complete.

5. All weeds are controlled.

8-02.3(13) Plant Establishment

Plant establishment consists of caring for all plants and planting areas within the project limits. The provisions of Sections 1-07.13(2) and 1-07.13(3) do not apply to this Section.

When the Proposal includes the bid item PSIPE____ (Plant Selection Including Plant Establishment), that bid item includes one year of plant establishment Work. The first year of plant establishment shall begin immediately upon written notification from the Engineer of the completion of initial planting for the project. The first-year plant establishment period shall be a minimum of one calendar year. The one calendar year shall be extended an amount equal to any periods where the Contractor does not comply with the plant establishment requirements and plan.

During the first-year plant establishment period, the Contractor shall perform all Work necessary to ensure the resumption and continued growth of the transplanted material. This Work shall include, but is not limited to, applying water, removing foreign, dead, or rejected plant material, maintaining all planting areas in a weed-free condition, and replacing all unsatisfactory plant material planted under the Contract. If plants are stolen or damaged by the acts of others, the Contracting Agency will pay invoice cost only for the replacement plants with no mark-up and the Contractor will be responsible for the labor to install the replacement plants. Other weed control within the project limits but outside of planting, lawn, or seeding areas shall be as specified in Section 8-02.3(3)C.

During the first year of plant establishment, the Contractor shall meet monthly or at an agreed upon schedule with the Engineer for the purpose of joint inspection of the planting material. The Contractor shall correct all unsatisfactory conditions identified by the Engineer within a 10-day period immediately following the inspection. If plant replacement is required, the Contractor shall, within the 10-day period, submit a plan and schedule for the plant procurement and replacement to occur during the planting period as designated in Section 8-02.3(8). At the end of the plant establishment period, plants that do not show normal growth shall be replaced and all staking and guying that remain on the project shall be removed unless otherwise allowed by the Engineer.

All automatic irrigation systems shall be operated fully automatic during the plant establishment period and until final acceptance of the Contract. Payment for water used to water in plants, or hand watering of plant material or lawn areas unless otherwise specified, is the responsibility of the Contractor during the first-year plant establishment period.

Subsequent year plant establishment periods shall begin immediately at the completion of the preceding year's plant establishment period. Each subsequent plant establishment period shall be one full calendar year in duration.

During the plant establishment period(s) after the first year plant establishment, the Work necessary for the continued healthy and vigorous growth of all plants material shall be performed as directed by the Engineer.

Payment for water used to water plants during the subsequent year(s) of plant establishment will be paid under the plant establishment item.

8-02.3(14) Plant Replacement

The Contractor shall be responsible for growing or arrange to provide sufficient plants for replacement of all plant material rejected through first-year plant establishment. All replacement plant material shall be inspected and accepted by the Engineer prior to installation. All rejected plant material shall be replaced with acceptable plants meeting the specifications and installed according to the requirements of this Section at dates allowed by the Engineer.

All replacement plants shall be of the same species as the plants they replace and meet the requirements of Section 9-14.8 unless otherwise allowed by the Engineer. Plants may vary in size reflecting one season of growth should the Contractor elect to hold plant material under nursery conditions for an additional year to serve as

replacement plants. Replacement plant material larger than specified in the Plans shall meet the applicable section requirements of the ASNS for container class, ball size, spread, and branching characteristics.

8-02.3(15) Bioengineering

Bioengineering consists of using plant materials for the purpose of streambank or earthen slope construction and surface stabilization. This Work may include installing woody plant cuttings in various forms as well as part of streambank or earthen slope construction.

8-02.3(15)A Fascines

Live fascines shall be constructed of live and dead cuttings bundled together with a diameter of 8 to 18 inches. Live cuttings shall be the species shown in the Plans. Dead branches may be cuttings from any woody, non-invasive plant native to the project area. Dead branches may be placed within the live fascine and on the side exposed to the air. Live branches shall be placed in contact with the soil along their entire length. Each live fascine must contain a minimum of eight live branches. Dead branches shall constitute no more than 40 percent of the total fascine content.

The total length of each live fascine shall be a minimum of 5 feet. Branches shall be bundled into log-like forms and bound with biodegradable twine spaced at 1-foot intervals along the entire length of the live fascine. Live fascines shall be installed horizontally in a trench whose depth shall be ½ the diameter of the live fascine. Secure the live fascine with live stakes 3 feet in length and ¾ inch in diameter placed at 18-inch intervals. A minimum of three live stakes shall be used per fascine. The live stakes shall be driven through the live fascine vertically into the slope. The ends of live fascines shall be woven together so that no gap remains between the two sections of the live fascine.

Prior to being covered with soil, the fascine shall be thoroughly watered. Once the fascine is covered with 6 inches of soil, the soil covering the fascine shall be thoroughly watered.

When used to remedy erosion areas, live fascines shall extend a minimum of two feet beyond the visible area of erosion and soil disturbance. The locations for live fascines and live stake rows shall be identified in the field for review and acceptance by the Engineer. The Engineer may require adjustment of fascine locations prior to installation in order to best accomplish the intended functions.

Plant replacement during plant establishment for “PSIPE Live Fascine” will be required for any section void of live shoots for a length of 3 feet or more. Replacement shall consist of installing live stakes, spaced 1 foot apart above the fascine within the area void of live shoots. Live stakes shall be of the same species as the live fascine and shall have a minimum length of 3 feet and a minimum diameter of ¾ inch. The requirements of Section 8-02.3(8) apply to PSIPE Live Fascine.

8-02.3(15)B Brush Mattress

Live brush mattress shall be constructed of live branch cuttings, live poles, jute rope and topsoil. The live cuttings and live poles shall be from the plant species designated in the Plans. Live branch cuttings shall be placed with the cut ends oriented down slope as shown in the Plans. Cuttings shall overlap from side to side and from top to bottom as each layer is constructed. The live branches in each succeeding upper layer shall overlap the adjacent lower layer by a minimum of 6 inches. A maximum of 20 percent of the branches may be dead branches, but the live branches shall be distributed evenly to provide even rooting and growth over the entire area of the brush mattress.

The Contractor shall anchor the live brush mattress to the slope using stakes and jute rope as shown in the Plans. Initially, the stakes shall be installed to protrude above the live brush mattress. The Contractor shall attach the jute rope to the stakes and tighten the rope by tamping the stakes further into the bank, pulling the live brush mattress tight against the soil surface. The Contractor shall cover the live brush mattress with sufficient stockpiled topsoil to ensure good soil contact with the live plant material.

Plant replacement during plant establishment for “PSIPE Live Brush Mattress” will be required for any section void of live shoots for an area of 25 square feet or more. Replacement shall consist of installing live stakes, spaced 3 feet apart in a triangular pattern within the area void of live shoots. Live stakes shall be of the same species as the live brush mattress and shall have a minimum length of 3 feet and a minimum diameter of ¾ inch. The requirements of Section 8-02.3(8) apply to PSIPE Brush Mattress.

8-02.3(15)C Brush Layer

Brush layers shall be constructed of live branch cuttings, randomly mixed, from the plant species listed under the brush layer heading in the Plans. The number of branches required will vary depending on the average branch diameter and layer thickness.

Brush layers shall be placed in a trench dug at a 45 degree incline into the slope or stream bank. Two-thirds to three-fourths of the length of the live branches shall be buried. Soil shall be firmly tamped in place. Succeeding layers shall be spaced as detailed in the Plans. Brush layer placed in stream banks shall be angled downstream.

Brush layers may include plant establishment when designated as PSIPE Brush Layer. Plant replacement for PSIPE Brush Layer will be required for each section void of live shoots for a continuous distance of 3 feet or more. The requirements of Section 8-02.3(8) apply to PSIPE Brush Layer.

8-02.3(16) Roadside Maintenance Under Construction

When the Contract includes the item, Roadside Maintenance Under Construction, this Work includes roadside mowing and ditch maintenance, and noxious weed control outside of planting areas according to Section 8-02.3(3)C.

8-02.3(16)A Roadside Mowing

The Contractor shall mow designated roadside grass areas to the limits designated by the Engineer. Roadside mowing is limited to slopes not steeper than 3(H) to 1(V).

The Contractor shall mow according to the following requirements:

1. Trim around traffic equipment, structures, planting areas, or other features extending above ground preceding or simultaneously with each mowing.

2. Maintain grass between 4 and 12 inches in height.

3. Operate mowing equipment with suitable guards to prevent throwing rocks or debris onto the traveled way or off of the Contracting Agency property. Power driven equipment shall not cause ruts, deformation, and compaction of the vegetated soil.

4. Removing clippings is required on the traveled way, shoulders, walkways, or Structures.

5. Restore soil rutting to a smooth and even grade at the direction of the Engineer.

8-02.3(16)B Ditch Maintenance

The Contractor shall maintain drainage for the duration of the Contract according to the following requirements:

1. Maintain flow lines in drainage channels and roadside ditches.

2. Cutting or trimming vegetation within drainage channels to maintain positive flow.

3. Remove dirt and debris from inside of culverts or any drainage area where runoff has allowed accumulations and re-seed for erosion control.

4. Restore channels to previous operational condition.

8-02.4 Measurement

Topsoil, bark or woodchip mulch and soil amendments will be measured by the acre or the square yard along the grade and slope of the area covered immediately after placement. Weed control pre-treatment of topsoil areas, excavation, and stockpiling are included in the bid item “Topsoil Type ___.

Bark or woodchip mulch rings will be measured per each.

Compost will be measured by the acre or the square yard along the grade and slope of the area covered immediately after application.

Seeding, fertilizing, and mulching will be measured by the acre or the square yard by ground slope measurement or through the use of design data.

Seeding and fertilizing by hand will be measured by the square yard. No adjustment in area size will be made for the vegetation free zone around each plant.

Seeded lawn, sod installation, and lawn mowing will be measured along the ground slope and computed in square yards of actual lawn completed, established, and accepted.

Plant selection will be measured per each.

PSIPE __ (Plant Selection Including Plant Establishment) will be measured per each.

Live Pole will be measured per each.

Live Stake Row will be measured by the linear foot along the ground slope line.

The pay quantities for plant materials will be determined by count of the number of satisfactory plants in each category accepted by the Engineer.

Fascine and PSIPE live fascine will be measured by the linear foot along the ground slope line.

Brush mattress and PSIPE live brush mattress will be measured by the surface square yard along the ground slope line.

Brush layer and PSIPE brush layer will be measured by the linear foot along the ground slope line.

Water will be measured in accordance with Section 2-07.4. Measurement will be made of only that water hauled in tank trucks or similar equipment.

8-02.5 Payment

Payment will be made for each of the following listed Bid items that are included in the Proposal:

"Project Area Weed and Pest Control" will be paid in accordance with Section 1-09.6.
For the purpose of providing a common Proposal for all Bidders, the Contracting Agency entered an amount for "Project Area Weed and Pest Control" in the Proposal to become a part of the total Bid by the Contractor. Payment under this item will be made only when the Work is not already covered by other items.

"Topsoil Type ____", per acre.
The unit Contract price per acre for "Topsoil Type ____" shall be full payment for all costs for the specified Work.

"Fine Compost ", per acre or per square yard.
"Medium Compost", per acre or per square yard.
"Coarse Compost", per acre or per square yard.
The unit Contract price per acre for "Fine Compost", "Medium Compost" or "Coarse Compost" shall be full pay for furnishing and spreading the compost onto the existing soil.

"Soil Amendment", per acre.
The unit Contract price per acre for "Soil Amendment" shall be full pay for furnishing and incorporating the soil amendment into the existing soil.

"Plant Selection ___", per each.
The unit Contract price for "Plant Selection ___", per each shall be full pay for all Work to perform the work as specified within the planting area prior to planting for weed control, planting area preparation and installation of plants with initial watering.

As the plants that do not include plant establishment are obtained, propagated, and grown, partial payments will be made as follows:

Payment of 15 percent of the unit Contract price per each when the plant materials have been contracted, propagated, and are growing under nursery conditions. The Contractor shall provide the Engineer with certification that the plant material has been procured or contracted for delivery to the project for planting within the time limits of the project. The certification shall state the location, quantity, and size of all material.

Payment will be increased to 100 percent of the unit Contract price per each for contracted plant material at the completion of the initial planting.

All partial payments shall be limited to the actual number of healthy vigorous plants that meet the stage requirements, limited to plan quantity. Previous partial payments made for materials rejected or missing will be deducted from future payments due the Contractor.

"PSIPE ___", per each.
The unit Contract price for "PSIPE ___", per each, shall be full pay for all Work necessary to perform as specified within the planting area for weed control and planting area preparation, planting, cleanup, and water necessary to complete planting operations as specified to the end of first year plant establishment.

As the plants that include plant establishment are obtained, propagated, and grown, partial payments will be made as follows after inspection by the Engineer:

Payment of 5 percent of the unit Contract price, per each, when the plant materials have been contracted, propagated, and are growing under nursery conditions. The Contractor shall provide the Engineer with certification that the plant material has been procured or contracted for delivery to the project for planting within the time limits of the project. The certification shall state the location, quantity, and size of all material.

Payment will be increased to 15 percent of the unit Contract price, per each, upon completion of the initial weed control and planting area preparation Work.

Payment will be increased to 60 percent of the unit Contract price per each for the contracted plant material in a designated unit area when planted.

Payment will be increased to 70 percent of the unit Contract price per each for contracted plant material at the completion of the initial planting.

Payment will be increased to the appropriate percentage upon reaching the following plant establishment milestones:

June 30th	80 percent
September 30th	90 percent
Completion of first-year plant establishment or after all replacement plants have been installed, whichever is later.	100 percent

Plant establishment milestones are achieved when planting areas meet conditions described in Section 8-02.3(13).

"Seeding, Fertilizing and Mulching", per acre.

"Seeding and Fertilizing", per acre or per square yard.

"Seeding and Fertilizing by Hand", per square yard.

"Second Application of Fertilizer", per acre.

"Seeding and Mulching", per acre.

"Seeded Lawn Installation", per square yard.
"Sod Installation", per square yard.
"Lawn Mowing", per square yard.
The unit Contract price per square yard for "Seeded Lawn Installation" or "Sod Installation" shall be full pay for all costs necessary to prepare the area, plant or sod the lawn, erect barriers, control weeds, and establish lawn areas and for furnishing all labor, tools, equipment, and materials necessary to complete the Work as specified and shall be paid in the following sequence for healthy, vigorous lawn:

Completion of Lawn Planting	60 percent of individual areas
Mid Lawn Establishment (after two mowings)	85 percent of individual areas
Completion of Lawn Establishment (after four mowings)	100 percent of individual areas

"Plant Establishment Year ____" will be paid in accordance with Section 1-09.6. For the purpose of providing a common Proposal for all Bidders, the Contracting Agency entered an amount for "Plant Establishment - ___ Year" in the Proposal to become a part of the total Bid by the Contractor.

"Live Pole", per each.

"Live Stake Row", per linear foot.

"Bark or Wood Chip Mulch", per acre.

"Bark or Wood Chip Mulch Rings", per each.
The unit Contract price per acre for "Bark or Wood Chip Mulch" shall be full pay for furnishing and spreading the mulch onto the existing soil.

"Fascine" and "PSIPE Live Fascine", per linear foot.
"Brush Mattress" and "PSIPE Live Brush Mattress", per square yard.
"Brush Layer" and "PSIPE Brush Layer", per linear foot.
When PSIPE is included with Fascine, Brush Mattress, or Brush Layer, the payment schedule for PSIPE ____ will apply.

"Roadside Maintenance under Construction" will be paid in accordance with Section 1-09.6.
For the purpose of providing a common Proposal for all Bidders, the Contracting Agency has entered an amount for "Roadside Maintenance Under Construction" in the Proposal to become a part of the total Bid by the Contractor.

"Water", per M Gal.

8-04.AP8

Section 8-04, Curbs, Gutters, and Spillways
April 2, 2018

8-04.2 Materials
In the first paragraph, the reference to "Portland Cement" is revised to read:

Cement 9-01

8-04.3(1) Cement Concrete Curbs, Gutters, and Spillways
The first paragraph is supplemented with the following:

Roundabout truck apron cement concrete curb and gutter shall be constructed with air entrained concrete Class 4000 conforming to the requirements of Section 6-02.

8-06.AP8

Section 8-06, Cement Concrete Driveway Entrances
April 2, 2018

8-06.2 Materials
In the first paragraph, the reference to "Portland Cement" is revised to read:

Cement 9-01

8-06.3 Construction Requirements
The first paragraph is revised to read:

Cement concrete driveway approaches shall be constructed with air entrained concrete Class 4000 conforming to the requirements of Section 6-02 or Portland Cement or

Blended Hydraulic Cement Concrete Pavement conforming to the requirements of Section 5-05.

8-07.AP8

Section 8-07, Precast Traffic Curb
April 2, 2018

8-07.3(1) Installing Curbs

The first sentence of the first paragraph is revised to read:

> The curb shall be firmly bedded for its entire length and breadth on a mortar bed conforming to Section 9-20.4(3) composed of one part Portland cement or blended hydraulic cement and two parts sand.

The fourth paragraph is revised to read:

> All joints between adjacent pieces of curb except joints for expansion and/or drainage as designated by the Engineer shall be filled with mortar composed of one part Portland cement or blended hydraulic cement and two parts sand.

8-09.AP8

Section 8-09, Raised Pavement Markers
April 1, 2019

8-09.5 Payment

The last paragraph is revised to read:

> The unit Contract price per hundred for “Raised Pavement Marker Type 1”, “Raised Pavement Marker Type 2”, “Raised Pavement Marker Type 3_____ In.”, and “Recessed Pavement Marker” shall be full pay for furnishing and installing the markers in accordance with these Specifications.

8-11.AP8

Section 8-11, Guardrail
April 1, 2019

8-11.3(1)A Erection of Posts

The first sentence of the first paragraph is revised to read:

> Posts shall be set to the true line and grade of the Highway after the grade is in place and compaction is completed.

8-11.3(1)C Terminal and Anchor Installation

The first paragraph is revised to read:

> All excavation and backfilling required for installation of anchors shall be performed in accordance with Section 2-09, except that the costs thereof shall be included in the unit Contract price for the anchor installed.

The first sentence of the second to last paragraph is revised to read:

Assembly and installation of Beam Guardrail Non-flared Terminals for Type 31 guardrail shall be supervised at all times by a manufacturer's representative, or an installer who has been trained and certified by the manufacturer.

The last paragraph is revised to read:

Beam Guardrail Non-flared Terminals for Type 31 guardrail shall meet the crash test and evaluation criteria in the Manual for Assessing Safety Hardware (MASH).

8-11.4 Measurement

The third paragraph is revised to read:

Measurement of beam guardrail _____ terminal will be per each for the completed terminal.

The fourth paragraph is revised to read:

Measurement of beam guardrail Type 31 buried terminal Type 2 will be per linear foot for the completed terminal.

The sixth paragraph is revised to read:

Measurement of beam guardrail anchor Type 10 will be per each for the completed anchor, including the attachment of the anchor to the guardrail.

8-11.5 Payment

The Bid item "Beam Guardrail Anchor Type ___", per each is revised to read "Beam Guardrail Anchor Type 10", per each.

The Bid item "Beam Guardrail Buried Terminal Type 1", per each is deleted from this section.

The Bid item "Beam Guardrail Buried Terminal Type 2", per linear foot and the following paragraph are revised to read:

"Beam Guardrail Type 31 Buried Terminal Type 2", per linear foot.

The unit Contract price per linear foot for "Beam Guardrail Type 31 Buried Terminal Type 2" shall be full payment for all costs to obtain and provide materials and perform the Work as described in Section 8-11.3(1)C.

8-14.AP8

Section 8-14, Cement Concrete Sidewalks
April 2, 2018

8-14.2 Materials

In the first paragraph, the reference to "Portland Cement" is revised to read:

Cement 9-01

In the second paragraph, each reference to "Federal Standard 595" is revised to read "SAE AMS Standard 595".

8-16.AP8

Section 8-16, Concrete Slope Protection
April 2, 2018

8-16.2 Materials

In the first paragraph, the last two material references are revised to read:

Poured Portland Cement or Blended Hydraulic Cement Concrete Slope Protection	9-13.5(2)
Pneumatically Placed Portland Cement or Blended Hydraulic Cement Concrete Slope Protection	9-13.5(3)

8-17.AP8

Section 8-17, Impact Attenuator Systems
January 7, 2019

8-17.3 Construction Requirements

This section is supplemented with the following:

Permanent impact attenuators shall meet the crash test and evaluation criteria of the Manual for Assessing Safety Hardware (MASH), except as otherwise noted in the Plans or Special Provisions.

8-20.AP8

Section 8-20, Illumination, Traffic Signal Systems, Intelligent Transportation Systems, and Electrical
August 6, 2018

8-20.1(1) Regulations and Code

The last paragraph is revised to read:

Persons performing electrical Work shall be certified in accordance with and supervised as required by RCW 19.28.161. Proof of certification shall be worn at all times in accordance with WAC 296-46B-942. Persons failing to meet these certification requirements may not perform any electrical work, and shall stop any active electrical work, until their certification is provided and worn in accordance with this Section.

8-20.2(2) Equipment List and Drawings

This section is renumbered:

8-20.2(1) Equipment List and Drawings

8-20.3(4) Foundations

The second sentence of the first paragraph is revised to read:

Concrete for Type II, III, IV, V, and CCTV signal standards and light standard foundations shall be Class 4000P and does not require air entrainment.

8-20.3(5)A General

The last two sentences of the last paragraph is deleted.

This section is supplemented with the following:

All conduits shall include a pull tape with the equipment grounding conductor. The pull tape shall be attached to the conduit near the end bell or grounded end bushing, or to duct plugs or caps if present, at both ends of the conduit.

8-20.3(8) Wiring

The seventeenth paragraph is supplemented with the following:

Pulling tape shall meet the requirements of Section 9-29.1(10). Pull string may not be used.

8-20.3(14)C Induction Loop Vehicle Detectors

Item number 2 is deleted.

Item numbers 3 through 12 are renumbered to 2 through 11, respectively.

8-21.AP8

Section 8-21, Permanent Signing

January 7 2019

8-21.3(5) Sign Relocation

The second sentence of the first paragraph is revised to read:

Where the existing sign Structure is mounted on concrete pedestals, the Contractor shall remove the pedestal to a minimum of 2 feet below finished grade and backfill the remaining hole with material similar to that surrounding the hole.

8-21.3(9)F Foundations

Item number 3 of the twelfth paragraph is supplemented with the following new sentence:

Class 4000P concrete for roadside sign structures does not require air entrainment.

8-22.AP8

Section 8-22, Pavement Marking

January 7, 2019

8-22.3(2) Preparation of Roadway Surfaces

The second paragraph is revised to read:

Remove all other contaminants from pavement surfaces that may adversely affect the installation of new pavement marking.

8-22.3(3)F Application Thickness

The second to last sentence of the last paragraph is revised to read:

After grinding, clean the groove.

9-00.AP9

Section 9-00, Definitions and Tests
January 7, 2019

9-00.4 Sieves for Testing Purposes

This section is revised to read:

> Test sieves shall be made of either: (1) woven wire cloth conforming to ASTM E11, or (2) square-hole, perforated plates conforming to ASTM E323.

9-00.7 Galvanized Hardware, AASHTO M 232

The first sentence is revised to read:

> An acceptable alternate to hot-dip galvanizing in accordance with AASHTO M 232 will be zinc coatings mechanically deposited in accordance with ASTM B695, providing the minimum thickness of zinc coating is not less than that specified in AASHTO M 232, and the process will not produce hydrogen embrittlement in the base metal.

9-02.AP9

Section 9-02, Bituminous Materials
January 7, 2019

9-02.1 Asphalt Material, General

The second paragraph is revised to read:

> The Asphalt Supplier of Performance Graded (PG) asphalt binder and emulsified asphalt shall have a Quality Control Plan (QCP) in accordance with WSDOT QC 2 "Standard Practice for Asphalt Suppliers That Certify Performance Graded and Emulsified Asphalts". The Asphalt Supplier's QCP shall be submitted and receive the acceptance of the WSDOT State Materials Laboratory. Once accepted, any change to the QCP will require a new QCP to be submitted for acceptance. The Asphalt Supplier of PG asphalt binder and emulsified asphalt shall certify through the Bill of Lading that the PG asphalt binder or emulsified asphalt meets the Specification requirements of the Contract.

9-02.1(4) Performance Graded Asphalt Binder (PGAB)

This section's title is revised to read:

> **Performance Graded (PG) Asphalt Binder**

The first paragraph is revised to read:

> PG asphalt binder meeting the requirements of AASHTO M 332 Table 1 of the grades specified in the Contract shall be used in the production of HMA. For HMA with greater than 20 percent RAP by total weight of HMA, or any amount of RAS, the new asphalt binder, recycling agent and recovered asphalt (RAP and/or RAS) when blended in the proportions of the mix design shall meet the PG asphalt binder requirements of AASHTO M 332 Table 1 for the grade of asphalt binder specified by the Contract.

The second paragraph, including the table, is revised to read:

In addition to AASHTO M 332 Table 1 specification requirements, PG asphalt binders shall meet the following requirements:

		Additional Requirements by Performance Grade (PG) Asphalt Binders					
Property	**Test Method**	**PG58S-22**	**PG58H-22**	**PG58V-22**	**PG64S-28**	**PG64H-28**	**PG64V-28**
RTFO Residue: Average Percent Recovery @ 3.2 kPa	AASHTO T 350[1]			30% Min.	20% Min.	25% Min.	30% Min.
[1]Specimen conditioned in accordance with AASHTO T 240 – RTFO.							

The third paragraph is revised to read:

The RTFO J_{nrdiff} and the PAV direct tension specifications of AASHTO M 332 are not required.

9-02.1(6) Cationic Emulsified Asphalt

This section is revised to read:

Cationic Emulsified Asphalt meeting the requirements of AASHTO M 208 Table 1 of the grades specified in the Contract shall be used.

9-02.5 Warm Mix Asphalt (WMA) Additive

This section, including title, is revised to read:

9-02.5 HMA Additive

Additives for HMA shall be accepted by the Engineer.

9-03.AP9

Section 9-03, Aggregates
January 7, 2019

9-03.1 Aggregates for Portland Cement Concrete

This section's title is revised to read:

Aggregates for Concrete

9-03.1(1) General Requirements

The first two sentences of the first paragraph are revised to read:

Concrete aggregates shall be manufactured from ledge rock, talus, or sand and gravel in accordance with the provisions of Section 3-01. Reclaimed aggregate may be used if it complies with the specifications for concrete.

The second paragraph (up until the colon) is revised to read:

Aggregates for concrete shall meet the following test requirements:

The second sentence of the second to last paragraph is revised to read:

The Contractor shall submit test results according to ASTM C1567 through the Engineer to the State Materials Laboratory that demonstrate that the proposed fly ash when used with the proposed aggregates and cement will control the potential expansion to 0.20 percent or less before the fly ash and aggregate sources may be used in concrete.

9-03.1(2) Fine Aggregate for Portland Cement Concrete

This section's title is revised to read:

Fine Aggregate for Concrete

9-03.1(4) Coarse Aggregate for Portland Cement Concrete

This section's title is revised to read:

Coarse Aggregate for Concrete

9-03.1(4)C Grading

The first paragraph (up until the colon) is revised to read:

Coarse aggregate for concrete when separated by means of laboratory sieves shall conform to one or more of the following gradings as called for elsewhere in these Specifications, Special Provisions, or in the Plans:

9-03.1(5) Combined Aggregate Gradation for Portland Cement Concrete

This section's title is revised to read:

Combined Aggregate Gradation for Concrete

9-03.1(5)B Grading

In the last paragraph, "WSDOT FOP for WAQTC/AASHTO T 27/T 11" is revised to read "FOP for WAQTC/AASHTO T 27/T 11".

9-03.2 Aggregate for Job-Mixed Portland Cement Mortar

This section's title is revised to read:

Aggregate for Job-Mixed Portland Cement or Blended Hydraulic Cement Mortar

The first sentence of the first paragraph is revised to read:

Fine aggregate for portland cement or blended hydraulic cement mortar shall consist of sand or other inert materials, or combinations thereof, accepted by the Engineer, having hard, strong, durable particles free from adherent coating.

9-03.4(1) General Requirements

The first paragraph (up until the colon) is revised to read:

Aggregate for bituminous surface treatment shall be manufactured from ledge rock, talus, or gravel, in accordance with Section 3-01. Aggregates for Bituminous Surface Treatment shall meet the following test requirements:

9-03.8(1) General Requirements

The first paragraph (up until the colon) is revised to read:

Aggregates for Hot Mix Asphalt shall meet the following test requirements:

9-03.8(2) HMA Test Requirements

The two tables in the second paragraph are replaced with the following three tables:

Mix Criteria	HMA Class							
	⅜ inch		½ inch		¾ inch		1 inch	
	Min.	Max.	Min.	Max.	Min.	Max.	Min.	Max.
Voids in Mineral Aggregate (VMA), %	15.0		14.0		13.0		12.0	
Voids Filled With Asphalt (VFA), %								
ESAL's (millions)	VFA							
< 0.3	70	80	70	80	70	80	67	80
0.3 to < 3	65	78	65	78	65	78	65	78
≥ 3	73	76	65	75	65	75	65	75
Dust/Asphalt Ratio	0.6	1.6	0.6	1.6	0.6	1.6	0.6	1.6

Test Method	ESAL's (millions)	Number of Passes
Hamburg Wheel-Track Testing, FOP for AASHTO T 324 Minimum Number of Passes with no Stripping Inflection Point and Maximum Rut Depth of 10mm	< 0.3	10,000
	0.3 to < 3	12,500
	≥ 3	15,000
Indirect Tensile (IDT) Strength (psi) of Bituminous Materials FOP for ASTM D6931		175 Maximum

	ESAL's (millions)	N initial	N design	N maximum
% Gmm	< 0.3	≤ 91.5	96.0	≤ 98.0
	0.3 to < 3	≤ 90.5	96.0	≤ 98.0
	≥ 3	≤ 89.0	96.0	≤ 98.0
Gyratory Compaction (number of gyrations)	< 0.3	6	50	75
	0.3 to < 3	7	75	115
	> 3	8	100	160

9-03.8(7) HMA Tolerances and Adjustments

In the table in item number 1, the fifth row is revised to read:

Asphalt binder	-0.4% to 0.5%		±0.7%

In the table in item number 1, the following new row is inserted before the last row:

Voids in Mineral Aggregate, VMA	-1.0%		

9-03.9(1) Ballast

The second paragraph (up until the colon) is revised to read:

Aggregates for ballast shall meet the following test requirements:

9-03.14(4) Gravel Borrow for Structural Earth Wall

The second sentence of the first paragraph is revised to read:

The material shall be substantially free of shale or other soft, poor durability particles, and shall not contain recycled materials, such as glass, shredded tires, concrete rubble, or asphaltic concrete rubble.

9-03.21(1)B Recycled Concrete Aggregate Approval and Acceptance

The first sentence of the second paragraph is revised to read:

Recycled concrete aggregate may be used as coarse aggregate or blended with coarse aggregate for Commercial Concrete, Class 3000 concrete, or Cement Concrete Pavement.

Item number 4 of the second paragraph is revised to read:

4. For Cement Concrete Pavement mix designs using recycled concrete aggregates, the Contractor shall submit evidence that ASR mitigating measures control expansion in accordance with Section 9-03.1(1).

This section is supplemented with the following new subsection:

9-03.21(1)B1 Recycled Concrete Aggregate Approval and Acceptance

Recycled concrete aggregate may be approved through a three tiered system that consists of the following:

Tier 1	
Approval Requirements	Approval of the Reclamation Facility is not required.
Acceptance Requirements	Certification of toxicity characteristics in accordance with Section 9-03.21(1). Field acceptance testing in accordance with Section 3-04.
Approved to provide the following Aggregate Materials:	
9-03.10 Aggregate for Gravel Base 9-03.12(1)B Gravel Backfill for Foundations Class B 9-03.12(2) Gravel Backfill for Walls 9-03.12(3) Gravel Backfill for Pipe Zone Bedding 9-03.14(1) Gravel Borrow 9-03.14(2) Select Borrow 9-03.14(2) Select Borrow (greater than 3 feet below subgrade and side slope) 9-03.14(3) Common Borrow 9-03.14(3) Common Borrow (greater than 3 feet below subgrade and side slope) 9-03.17 Foundation Material Class A and Class B 9-03.18 Foundation Material Class C 9-03.19 Bank Run Gravel for Trench Backfill	

Tier 2

Approval Requirements	The Reclamation Facility shall have a Quality Control Plan (QCP) in accordance with WSDOT QC 9 "Standard Practice for Approval of Reclamation Facilities of WSDOT Recycled Concrete and Returned Concrete". The Reclamation Facility's QCP shall be submitted and approved by the WSDOT State Materials Laboratory. Once accepted, any changes to the QCP will require a new QCP to be submitted for acceptance. Evaluation of aggregate source properties (LA Wear and Degradation) for the recycled concrete aggregate is not required.
Acceptance Requirements	Certification of toxicity characteristics in accordance with Section 9-03.21(1), required if requested. Field acceptance testing in accordance with Section 3-04 is required. Provide certification in accordance with WSDOT QC 9 for every lot. A lot shall be no larger than 10,000 tons.
Approved to provide the following Aggregate Materials:	
Tier 1 aggregate materials 9-03.1 Coarse Aggregate for Commercial Concrete or Concrete class 3000 9-03.9(1) Ballast 9-03.9(2) Permeable Ballast 9-03.9(3) Crushed Surfacing 9-03.12(1)A Gravel Backfill for Foundations Class A	

1

Tier 3	
Approval Requirements	The Reclamation Facility shall have a Quality Control Plan (QCP) in accordance with WSDOT QC 10 "Standard Practice for Approval of Reclamation Facilities of Recycled Concrete Aggregates from Stockpiles of Unknown Sources". The Reclamation Facility's QCP shall be submitted and approved by the WSDOT State Materials Laboratory. Once accepted, any changes to the QCP will require a new QCP to be submitted for acceptance. Evaluation of aggregate source properties (LA Wear and Degradation) for the recycled concrete aggregate is required.
Acceptance Requirements	Certification of toxicity characteristics in accordance with Section 9-03.21(1) is required. Field acceptance testing in accordance with Section 3-04 is required. Provide certification in accordance with WSDOT QC 10 for every lot. A lot shall be no larger than 10,000 tons
Approved to provide the following Aggregate Materials:	
Tier 1 aggregate materials 9-03.1 Coarse Aggregate for Commercial Concrete or Concrete class 3000 9-03.9(1) Ballast 9-03.9(2) Permeable Ballast 9-03.9(3) Crushed Surfacing 9-03.12(1)A Gravel Backfill for Foundations Class A	

2

For Reclamation Facilities that do not participate in Tier 2 and Tier 3, approval of recycled concrete aggregate will be in accordance with Section 9-03.21(1), and acceptance will be in accordance with Section 3-04.

9-03.21(1)E Table on Maximum Allowable percent (By Weight) of Recycled Material

"Portland Cement" is deleted from the first two rows in the table.

The following new row is inserted after the second row:

Coarse Aggregate for Concrete Pavement	9-03.1(4)	0	100	0	0

The first column of the fourth row (after the preceding Amendment is applied) is revised to read:

Coarse Aggregate for Commercial Concrete and Class 3000 Concrete

9-04.AP9

Section 9-04, Joint and Crack Sealing Materials
January 7, 2019

This section's title is revised to read:

Joint Sealing Materials

9-04.1(2) Premolded Joint Filler for Expansion Joints

In this section, each reference to "AASHTO T 42" is revised to read "ASTM D 545".

9-04.2(1)A1 Hot Poured Sealant for Cement Concrete Pavement

This section is supplemented with the following:

Hot poured sealant for cement concrete pavement is acceptable for installations in joints where cement concrete pavement abuts a bituminous pavement.

9-04.2(1)A2 Hot Poured Sealant for Bituminous Pavement

This section is supplemented with the following:

Hot poured sealant for bituminous pavement is acceptable for installations in joints where cement concrete pavement abuts a bituminous pavement.

9-04.2(1)B Sand Slurry for Bituminous Pavement

Item number 2 of the first paragraph is revised to read:

2. Two percent portland cement or blended hydraulic cement, and

9-04.3 Joint Mortar

The first paragraph is revised to read:

Mortar for hand mortared joints shall conform to Section 9-20.4(3) and consist of one part portland cement or blended hydraulic cement, three parts fine sand, and sufficient water to allow proper workability.

9-04.5 Flexible Plastic Gaskets

In the table, the Test Method value for **Specific Gravity at 77°F** is revised to read “ASTM D71”.

In the table, the Test Method value for **Flash Point COC, F** is revised to read “ASTM D93 REV A”.

In the table, the Test Method value for **Volatile Matter** is revised to read “ASTM D6”.

9-05.AP9

Section 9-05, Drainage Structures and Culverts
January 7, 2019

9-05.3(1)A End Design and Joints

The second sentence of the first paragraph is revised to read:

> The joints and gasket material shall meet the requirements of ASTM C990.

9-05.3(1)C Age at Shipment

The last sentence of the first paragraph is revised to read:

> Unless it is tested and accepted at an earlier age, it shall not be considered ready for shipment sooner than 28 days after manufacture when made with Type II portland cement or blended hydraulic cement, nor sooner than 7 days when made with Type III portland cement.

9-05.7(3) Concrete Storm Sewer Pipe Joints

The second sentence is revised to read:

> The joints and gasket material shall meet the requirements of ASTM C990.

9-05.7(4)A Hydrostatic Pressure on Pipes in Straight Alignment

The first sentence is revised to read:

> Hydrostatic pressure tests on pipes in straight alignment shall be made in accordance with the procedure outlined in Section 10 of ASTM C990, except that they shall be performed on an assembly consisting of not less than three nor more than five pipe sections selected from stock by the Engineer and assembled in accordance with standard installation instructions issued by the manufacturer.

9-05.24(1) Polypropylene Culvert Pipe and Storm Sewer Pipe

This section is revised to read:

> Polypropylene culvert and storm sewer pipe shall conform to the following requirements:
>
> 1. For dual wall pipe sizes up to 60 inches: ASTM F2881 or AASHTO M 330, Type S or Type D.
>
> 2. For double or triple wall pipe sizes up to 60 inches: ASTM F2764.

3. Fittings shall be factory welded, injection molded, or PVC.

9-05.24(2) Polypropylene Sanitary Sewer Pipe

This section is revised to read:

Polypropylene sanitary sewer pipe shall conform to the following requirements:

1. For pipe sizes up to 60 inches: ASTM F2764.

2. Fittings shall be factory welded, injection molded, or PVC.

9-06.AP9

Section 9-06, Structural Steel and Related Materials
January 7, 2019

9-06.5 Bolts

This section's title is revised to read:

Bolts and Rods

9-06.5(4) Anchor Bolts

This section, including title, is revised to read:

9-06.5(4) Anchor Bolts and Anchor Rods

Anchor bolts and anchor rods shall meet the requirements of ASTM F1554 and, unless otherwise specified, shall be Grade 105 and shall conform to Supplemental Requirements S2, S3, and S4.

Nuts for ASTM F1554 Grade 105 black anchor bolts and anchor rods shall conform to ASTM A563, Grade D or DH. Nuts for ASTM F1554 Grade 105 galvanized anchor bolts and anchor rods shall conform to either ASTM A563, Grade DH, or AASHTO M292, Grade 2H, and shall conform to the overtapping, lubrication, and rotational testing requirements in Section 9-06.5(3). Nuts for ASTM F1554 Grade 36 or 55 black or galvanized anchor bolts and anchor rods shall conform to ASTM A563, Grade A or DH. Washers shall conform to ASTM F436.

The bolts and rods shall be tested by the manufacturer in accordance with the requirements of the pertinent Specification and as specified in these Specifications. Anchor bolts, anchor rods, nuts, and washers shall be inspected prior to shipping to the project site. The Contractor shall submit to the Engineer for acceptance a Manufacturer's Certificate of Compliance for the anchor bolts, anchor rods, nuts, and washers, as defined in Section 1-06.3. If the Engineer deems it appropriate, the Contractor shall provide a sample of the anchor bolt, anchor rod, nut, and washer for testing.

All bolts, rods, nuts, and washers shall be marked and identified as required in the pertinent Specification.

9-06.15 Welded Shear Connectors

The third paragraph is revised to read:

Mechanical properties shall be determined in accordance with AASHTO T 244.

9-06.17 Vacant

This section, including title, is revised to read:

9-06.17 Noise Barrier Wall Access Door

Access door frames shall be formed of 14-gauge steel to the size and dimensions shown in the Plans. The access door frame head and jamb members shall be mitered, securely welded, and ground smooth. Each head shall have two anchors and each jamb shall have three anchors. The hinges shall be reinforced with ¼-inch by 12-inch plate, width equal to the full inside width of the frame.

Access doors shall be full flush 1-¾-inch thick seamless doors with a polystyrene core. Door faces shall be constructed with smooth seamless 14-gauge roller-levered, cold-rolled steel sheet conforming to ASTM A 792 Type SS, Grade 33 minimum, Coating Designation AZ55 minimum. The vertical edges shall be neat interlocked hemmed edge seam. The top and bottom of the door shall be enclosed with 14-gauge channels. Mortise and reinforcement for locks and hinges shall be 10-gauge steel. Welded top cap shall be ground and filled for exterior applications. The bottom channel shall have weep holes.

Each access door shall have three hinges. Access door hinges shall be ASTM A 276 Type 316 stainless steel, 4-½-inches square, with stainless steel ball bearing and non-removable pins.

Each access door shall have two pull plates. The pull plates shall be ASTM A 240 Type 316 stainless steel, with a grip handle of one-inch diameter and 8 to 10-inches in length.

The door assembly shall be fabricated and assembled as a complete unit including all hardware specified prior to shipment.

9-06.18 Metal Bridge Railing

The second sentence of the first paragraph is revised to read:

Steel used for metal railings, when galvanized after fabrication in accordance with AASHTO M111, shall have a controlled silicon content of either 0.00 to 0.06 percent or 0.15 to 0.25 percent.

9-07.AP9

Section 9-07, Reinforcing Steel
January 7, 2019

9-07.5(1) Epoxy-Coated Dowel Bars (for Cement Concrete Rehabilitation)

This section (including title) is revised to read:

9-07.5(1) Dowel Bars for Cement Concrete Pavement Rehabilitation

Dowel bars for Cement Concrete Pavement Rehabilitation shall be 1½ inch outside diameter plain round steel bars or tubular bars 18 inches in length and meet the requirements of one of the following dowel bar types:

1. Epoxy-coated dowel bars shall be round plain steel bars of the dimensions shown in the Standard Plans. They shall conform to AASHTO M31, Grade 60 or ASTM A615, Grade 60 and shall be coated in accordance with ASTM

A1078 Type 2 coating, except that the bars may be cut to length after being coated. Cut ends shall be coated in accordance with ASTM A1078 with a patching material that is compatible with the coating, inert in concrete and recommended by the coating manufacturer. The thickness of the epoxy coating shall be 10 mils plus or minus 2 mils. The Contractor shall furnish a written certification that properly identifies the coating material, the number of each batch of coating material used, quantity represented, date of manufacture, name and address of manufacturer, and a statement that the supplied coating material meets the requirements of ASTM A1078 Type 2 coating. Patching material, compatible with the coating material and inert in concrete and recommended by the manufacturer shall be supplied with each shipment for field repairs by the Contractor.

2. ASTM A513 steel tubes made from Grade 60 Carbon Steel Tube with a 1.625 inch outside diameter and a 0.120 inch wall thickness. Both the inside and outside of the tube shall be zinc coated with G40 galvanizing in accordance with ASTM A653. Following zinc coating the tubes shall be coated in accordance with Section 9-07.5(1) item 1. The ends of the tube shall be capped to prevent intrusion of concrete or other materials.

9-07.5(2) Corrosion Resistant Dowel Bars (for Cement Concrete Pavement and Cement Concrete Pavement Rehabilitation)

The first paragraph (up until the colon) is revised to read:

Corrosion resistant dowel bars shall be 1½ inch outside diameter plain round steel bars or tubular bars 18 inches in length and meet the requirements of one of the following:

Item number 4 and 5 of the first paragraph are revised to read:

4. Corrosion-resistant, low-carbon, chromium plain steel bars for concrete reinforcement meeting all the requirements of ASTM A 1035 Alloy Type CS Grade 100 or Alloy Type CS Grade 120.

5. Zinc Clad dowel bars shall be 1½ inch solid bars or 1.625 inch outside diameter by 0.120 inch wall tubular bars meeting the chemical and physical properties of AASHTO M 31, Grade 60, or AASHTO M 255, Grade 60. The bars shall have a minimum of 0.035 inches A710 Zinc alloy clad to the plain steel inner bar or tube. A710 Zinc shall be composed of: zinc: 99.5 percent, by weight, minimum; copper: 0.1-0.25 percent, by weight; and iron: 0.0020 percent, by weight, maximum. Each end of tubular bars shall be plugged using a snug-fitting insert to prohibit any intrusion of concrete or other materials.

The numbered list in the first paragraph is supplemented with the following:

6. Multicoated fusion bonded epoxy bars shall consist of an ASTM A615 bar with alternating layers of ASTM A934 coating and an abrasion resistant overcoat (ARO). The ASTM A934 coating shall form the base and there shall be two layers of each coating material. The minimum thickness of the combined layers of the ASTM A934 coating and ARO coating shall be 20 mils. The ARO shall meet the following requirements:

Test	Method	Specification

Gouge Resistance	NACE TM0215, 30 kg wt., LS-1 bit @ 25°C	< 0.22 mm
Gouge Resistance	NACE TM0215, 50 kg wt., LS-1 bit @ 25°C	< 0.44 mm

7. ASTM A513 steel tubes made from Grade 60 Carbon Steel Tube with a 1.625 inch outside diameter and a 0.120 inch wall thickness. Both the inside and outside of the tube shall be zinc coated with G90 galvanizing in accordance with ASTM A653. Following zinc coating the tubes shall be coated in accordance with Section 9-07.5(1) item 1. The ends of the tube shall be capped to prevent intrusion of concrete or other materials.

The last paragraph is revised to read:

Stainless Steel Clad and Stainless Steel Tube Dowel bar ends shall be sealed with a patching material (primer and finish coat) used for patching epoxy-coated reinforcing steel as required in Section 9-07.3, item 6.

9-07.7 Wire Mesh

This section is supplemented with the following:

Welded wire manufacturers shall participate in the NTPEP Audit Program for Reinforcing Steel (rebar) Manufacturers and shall be listed on the NTPEP audit program website displaying that they are NTPEP compliant.

9-08.AP9

Section 9-08, Paints and Related Materials
January 7, 2019

9-08.1(1) Description

The first sentence is revised to read:

Paint used for highway and bridge structure applications shall be made from materials meeting the requirements of the applicable Federal and State Paint Specifications, Department of Defense (DOD), American Society of Testing of Materials (ASTM), and The Society for Protective Coatings (SSPC) specifications in effect at time of manufacture.

9-08.1(2) Paint Types

This section is supplemented with the following new subsections:

9-08.1(2)M NEPCOAT Qualified Products List A

Qualified products used shall be part of a NEPCOAT system supplied by the same manufacturer.

9-08.1(2)N NEPCOAT Qualified Products List B

Qualified products used shall be part of a NEPCOAT system supplied by the same manufacturer.

9-08.1(2)D Organic Zinc-Rich Primer

This section, including title, is revised to read:

Vacant

9-08.1(2)E Epoxy Polyamide

This section is revised to read:

Epoxy polyamide shall be a two-component system conforming to MIL-DTL-24441 or SSPC Coating Standard No. 42.

9-08.1(2)H Top Coat, Single-Component, Moisture-Cured Polyurethane

This section is revised to read:

Vehicle Type: Moisture-cured aliphatic polyurethane.

Color and Gloss: Meet the SAE AMS Standard 595 Color as specified in the table below.

The Top Coat shall meet the following requirements:

The resin shall be an aliphatic urethane.

Minimum-volume solids 50 percent.

The top coat shall be semi-gloss.

Color	Semi-Gloss
Washington Gray	26357
Mt. Baker Gray	26134
Mt. St. Helens Gray	26306
Cascade Green	24158

9-08.1(2)I Rust-Penetrating Sealer

This section is revised to read:

Rust-penetrating sealer shall be a two-component, chemically-cured, 100 percent solids epoxy.

9-08.1(2)J Black Enamel

This section is revised to read:

The enamel shall conform to Federal Specification MIL PRF 24635E Type II Class 2.

9-08.1(2)K Orange Equipment Enamel

The first paragraph is revised to read:

The enamel shall be an alkyd gloss enamel conforming to Federal Specification MIL-PRF-24635E Type II Class 1. The color, when dry, shall match that of SAE AMS Standard 595, color number 12246.

9-08.1(2)L Exterior Acrylic Latex Paint-White

The first paragraph is revised to read:

This paint shall conform to Federal Specification MIL-PRF-24635E Type II Class 1, 2 or 3.

9-08.1(7) Acceptance

This section is revised to read:

For projects with moisture-cured polyurethane quantities less than 20 gallons, acceptance will be by the Manufacturer's Certificate of Compliance.

For projects with moisture-cured polyurethane quantities greater than 20 gallons, the product shall be listed in the current WSDOT Qualified Products List (QPL). If the lot number is listed on the QPL, it may be accepted without additional testing. If the lot number is not listed on the QPL, a 1 quart sample shall be submitted to the State Materials Laboratory for testing and acceptance.

For all other paint types, acceptance will be based on visual inspection.

9-08.1(8) Standard Colors

In the first paragraph, the reference to "Federal Standard 595" is revised to read "SAE AMS Standard 595".

The second paragraph is revised to read:

Unless otherwise specified, all top or finish coats shall be semi-gloss, with the paint falling within the range of 35 to 70 on the 60-degree gloss meter.

9-08.2 Powder Coating Materials for Coating Galvanized Surfaces

The last paragraph is revised to read:

Repair materials shall be as recommended by the powder coating manufacturer and as specified in the Contractor's powder coating plan as accepted by the Engineer.

9-08.3 Pigmented Sealer Materials for Coating of Concrete Surfaces

This section, including title, is revised to read:

9-08.3 Concrete Surface Treatments

9-08.3(1) Pigmented Sealer Materials

The pigmented sealer shall be a semi-opaque, colored toner containing only methyl methacrylate-ethyl acrylate copolymer resins, toning pigments suspended in solution at all times by a chemical suspension agent, and solvent. Toning pigments shall be laminar silicates, titanium dioxide, and inorganic oxides only. There shall be no settling or color variation. Tinting shall occur at the factory at the time of manufacture and placement in containers, prior to initial shipment. Use of vegetable or marine oils, paraffin materials, stearates, or organic pigments in any part of coating formulation will not be permitted. The color of pigmented sealer shall be as specified by the Contracting Agency. The Contractor shall submit a 1-quart wet sample, a drawdown color sample, and spectrophotometer or colorimeter readings taken in accordance with ASTM D2244, for each batch and corresponding standard color card. The calculated Delta E shall not exceed 1.5 from the Commission Internationale de l'Eclairage (CIELAB) when measured at 10 degrees Standard Observer and Illuminant D 65.

The 1-quart wet sample shall be submitted in the manufacturer's labeled container with product number, batch number, and size of batch. The companion drawdown

color sample shall be labeled with the product number, batch number, and size of batch. The Contractor shall submit the specified samples and readings to the Engineer at least 14 calendar days prior to the scheduled application of the sealer. The Contractor shall not begin applying pigmented sealer until receiving the Engineer's written approval of the pigmented sealer color samples.

9-08.3(2) Exposed Aggregate Concrete Coatings and Sealers

9-08.3(2)A Retardant Coating

Retardant coating shall exhibit the following properties:

1. Retards the set of the surface mortar of the concrete without preventing the concrete to reach the specified 28 day compressive strength.

2. Leaves the aggregate with its original color and luster, and firmly embedded in the concrete matrix.

3. Allows the removal of the surface mortar in accordance with the methods specified in Section 6-02.3(14)E without the use of acidic washing compounds.

4. Allows for uniform removal of the surface mortar.

If the Contractor proposes use of a retardant coating that is not listed in the current WSDOT QPL, the Contractor shall submit a Type 2 Working Drawing consisting of a one quart product sample from a current lot along with supporting product information, Safety Data Sheet, and a Manufacturer's Certificate of Compliance stating that the product conforms to the above performance requirements.

9-08.3(2)B Clear Sealer

The sealer for concrete surfaces with exposed aggregate finish shall be a clear, non-gloss, penetrating sealer of either a silane, siloxane, or silicone based formulation.

9-08.3(3) Permeon Treatment

Permeon treatment shall be a product of known consistent performance in producing the SAE AMS Standard 595 Color No. 30219 target color hue established by WSDOT, either selected from the WSDOT Qualified Products List (QPL), or an equivalent product accepted by the Engineer. For acceptance of products not listed in the current WSDOT QPL, the Contractor shall submit Type 3 Working Drawings consisting of a one quart product sample from a current lot, supporting product information and a Safety Data Sheet.

9-13.AP9

Section 9-13, Riprap, Quarry Spalls, Slope Protection, and Rock for Erosion and Scour Protection and Rock Walls
April 2, 2018

9-13.1(1) General

The last paragraph is revised to read:

Riprap and quarry spalls shall be free from segregation, seams, cracks, and other defects tending to destroy its resistance to weather and shall meet the following test requirements:

9-13.5 Concrete Slope Protection

This section is revised to read:

Concrete slope protection shall consist of reinforced portland cement or blended hydraulic cement concrete poured or pneumatically placed upon the slope with a rustication joint pattern or semi-open concrete masonry units placed upon the slope closely adjoining each other.

9-13.5(2) Poured Portland Cement Concrete Slope Protection

This section's title is revised to read:

Poured Portland Cement or Blended Hydraulic Cement Concrete Slope Protection

9-13.5(3) Pneumatically Placed Portland Cement Concrete Slope Protection

This section's title is revised to read:

Pneumatically Placed Portland Cement or Blended Hydraulic Cement Concrete Slope Protection

The first paragraph is revised to read:

Cement – This material shall be portland cement or blended hydraulic cement as specified in Section 9-01.

9-13.7(1) Rock for Rock Walls and Chinking Material

The first paragraph (up until the colon) is revised to read:

Rock for rock walls and chinking material shall be hard, sound and durable material, free from seams, cracks, and other defects tending to destroy its resistance to weather, and shall meet the following test requirements:

9-14.AP9

Section 9-14, Erosion Control and Roadside Planting
August 6, 2018

9-14.4(2) Hydraulically Applied Erosion Control Products (HECPs)

In Table 1, the last four rows are deleted.

9-14.4(2)A Long-Term Mulch

The first paragraph is supplemented with the following:

Products containing cellulose fiber produced from paper or paper components will not be accepted.

Table 2 is supplemented with the following new rows:

Water Holding Capacity	ASTM D 7367	800 percent minimum

Organic Matter Content	AASHTO T 267	90 percent minimum
Seed Germination Enhancement	ASTM D 7322	Long Term 420 percent minimum

9-14.4(2)B Moderate-Term Mulch

This section is revised to read:

Within 48 hours of application, the Moderate-Term Mulch shall bond with the soil surface to create a continuous, absorbent, flexible, erosion-resistant blanket. Moderate-Term Mulch shall effectively perform the intended erosion control function in accordance with Section 8-01.3(1) for a minimum of 3 months, or until temporary vegetation has been established, whichever comes first.

Moderate-Term Mulch shall not be used in conjunction with permanent seeding.

9-14.4(2)C Short-Term Mulch

This section is revised to read:

Short-Term Mulch shall effectively perform the intended erosion control function in accordance with Section 8-01.3(1) for a minimum of 2 months, or until temporary vegetation has been established, whichever comes first. Short-Term Mulch shall not be used in conjunction with permanent seeding.

9-16.AP9

Section 9-16, Fence and Guardrail
August 6, 2018

9-16.3(1) Rail Element

The last sentence of the first paragraph is revised to read:

All rail elements shall be formed from 12-gage steel except for thrie beam reducer sections, reduced length thrie beam rail elements, thrie beams used for bridge rail retrofits, and Design F end sections, which shall be formed from 10-gage steel.

9-16.3(5) Anchors

The last paragraph is revised to read:

Cement grout shall conform to Section 9-20.3(4) and consist of one part portland cement or blended hydraulic cement and two parts sand.

9-18.AP9

Section 9-18, Precast Traffic Curb
April 2, 2018

9-18.1(1) Aggregates and Proportioning

Item number 1 of the first paragraph is revised to read:

1. Portland cement or blended hydraulic cement shall conform to the requirements of Section 9-01 except that it may be Type I portland cement conforming to AASHTO M 85.

9-20.AP9

Section 9-20, Concrete Patching Material, Grout, and Mortar
April 1, 2019

9-20.1 Patching Material

This section, including title, is revised to read:

9-20.1 Patching Material for Cement Concrete Pavement

Concrete patching material shall be prepackaged mortar extended with aggregate. The amount of aggregate for extension shall conform to the manufacturer's recommendation.

Patching mortar and patching mortar extended with aggregate shall contain cementitious material and conform to Sections 9-20.1(1) and 9-20.1(2). The Manufacturer shall use the services of a laboratory that has an equipment calibration verification system and a technician training and evaluation process in accordance with AASHTO R 18 to perform all tests specified in Section 9-20.1.

9-20.1(1) Patching Mortar

Patching mortar shall conform to the following requirements:

Compressive Strength	ASTM Test Method	Specification
at 3 hours	C 39	Minimum 3,000 psi
at 24 hours	C 39	Minimum 5,000 psi
Length Change		
at 28 days	C 157	0.15 percent maximum
Total Chloride Ion Content	C 1218	1 lb/yd^3 maximum
Bond Strength		
at 24 hours	C 882 (As modified by C 928, Section 9.5)	Minimum 1,000 psi
Scaling Resistance (at 25 cycles of freezing and thawing)	C 672 (As modified by C 928, Section 9.4)	1 lb/ft^2 maximum

9-20.1(2) Patching Mortar Extended with Aggregate

Patching mortar extended with aggregate shall meet the following requirements:

Compressive Strength	ASTM Test Method	Specification
at 3 hours	C 39	Minimum 3,000 psi
at 24 hours	C 39	Minimum 5,000 psi
Length Change		
at 28 days	C 157	0.15 percent maximum
Bond Strength		
at 24 hours	C 882 (As modified by ASTM C928, Section 9.5)	Minimum 1,000 psi
Scaling Resistance (at 25 cycles of freezing and thawing)	C 672	2 Maximum Visual Rating
Freeze thaw	C 666	Maximum expansion 0.10% Minimum durability 90.0%

9-20.1(3) Aggregate

Aggregate used to extend the patching mortar shall conform to Section 9-03.1(4) and be AASHTO Grading No. 8. A Manufacturer's Certificate of Compliance shall be submitted showing the aggregate source and the gradation. Mitigation for Alkali Silica Reaction (ASR) will not be required for the extender aggregate used for concrete patching material.

9-20.1(4) Water

Water shall meet the requirements of Section 9-25.1. The quantity of water shall be within the limits recommended by the repair material manufacturer.

9-20.2 Specifications

This section, including title, is revised to read:

9-20.2 Patching Material for Concrete Structure Repair

Concrete patching material shall be a prepackaged mixture of portland or blended hydraulic cement, aggregate, and admixtures. Fly ash, ground granulated blast furnace slag and microsilica fume may be used. The concrete patching material may be shrinkage compensated. The concrete patching material shall also meet the following requirements:

- Compressive strength of 6000 psi or higher at 28 days in accordance with AASHTO T 22 (ASTM C 39), unless noted otherwise
- Bond strength of 250 psi or higher at 28 days or less in accordance with ASTM C 1583 or ICRI 210.3R
- Shrinkage shall be 0.05 percent (500 microstrain) or lower at 28 days in accordance with AASHTO T 160 (ASTM C 157) as modified by ICRI 320.3R
- Permeability shall be 2,000 coulombs or lower at 28 days in accordance with AASHTO T 277 (ASTM C 1202)
- Freeze-thaw resistance shall have a durability factor of 90 percent or higher after a minimum of 300 cycles in accordance with AASHTO T 161 Procedure A (ASTM C 666)
- Soluble chloride ion limits in Section 6-02.3(2) shall be satisfied

9-20.2(1) Patching Mortar

This section, including title, is deleted in its entirety.

9-20.2(2) Patching Mortar Extended with Aggregate

This section, including title, is deleted in its entirety.

9-20.3(3) Grout Type 3 for Unconfined Bearing Pad Applications

This section's title is revised to read:

Grout Type 3 for Unconfined Applications

This section is revised to read:

Grout Type 3 shall be a prepackaged material that does not include expansive admixtures meeting the following requirements:

- Compressive strength shall be 4000 psi or higher at 28 days in accordance with AASHTO T 22 (ASTM C 39) for grout extended with coarse aggregate or AASHTO T 106 (ASTM C109) otherwise.

- Bond strength shall meet one of the following:

  - 250 psi or higher at 28 days or less in accordance with ASTM C1583.

  - 2000 psi or higher at 28 days or less in accordance with ASTM C882. The following modification to ASTM C882 is acceptable: use Type 3 Grout in lieu of epoxy resin base bonding system and freshly mixed portland-cement mortar in the procedure for testing Type II and V systems.

- Drying shrinkage shall be 0.08 percent (800 microstrain) or lower at 28 days in accordance with AASHTO T 160 (ASTM C157). The following modification to AASHTO T 160 is acceptable: use a standard specimen size of 3 x 3 x 11-¼ inches.

9-20.5 Bridge Deck Repair Material

Item number 3 of the first paragraph is revised to read:

3. Permeability of less than 2,000 coulombs at 28-days or more in accordance with AASHTO T 277.

9-21.AP9

Section 9-21, Raised Pavement Markers (RPM)
January 2, 2018

9-21.2 Raised Pavement Markers Type 2

This section's content is deleted.

9-21.2(1) Physical Properties

This section, including title, is revised to read:

9-21.2(1) Standard Raised Pavement Markers Type 2

The marker housing shall contain reflective faces as shown in the Plans to reflect incident light from either a single or opposite directions and meet the requirements of ASTM D 4280 including Flexural strength requirements.

9-21.2(2) Optical Requirements

This section, including title, is revised to read:

9-21.2(2) Abrasion Resistant Raised Markers Type 2

Abrasion Resistant Raised Markers Type 2 shall comply with Section 9-21.2(1) and meet the requirements of ASTM D 4280 with the following additional requirement: The coefficient of luminous intensity of the markers shall be measured after subjecting the entire lens surface to the test described in ASTM D 4280 Section 9.5 using a sand drop

apparatus. After the exposure described above, retroreflected values shall not be less than 0.5 times a nominal unblemished sample.

9-21.2(3) Strength Requirements

This section is deleted in its entirety.

9-23.AP9

Section 9-23, Concrete Curing Materials and Admixtures
April 1, 2019

9-23.12 Natural Pozzolan

This section is revised to read:

> Natural Pozzolans shall be ground Pumice and shall conform to the requirements of AASHTO M295 Class N, including supplementary optional chemical requirements as set forth in Table 2.

9-23.13 Blended Supplementary Cementitious Material

The second sentence is revised to read:

> Blended SCMs shall be limited to binary or ternary blends of fly ash, ground granulated blast furnace slag and microsilica fume.

The second to last sentence is deleted.

9-26.AP9

Section 9-26, Epoxy Resins
January 7, 2019

9-26.1(1) General

The following new sentence is inserted after the first sentence of the first paragraph:

> For pre-packaged cartridge kits, the epoxy bonding agent shall meet the requirements of ASTM C881 when mixed according to manufacturer instructions, utilizing the manufacturer's mixing nozzle.

9-26.1(2) Packaging and Marking

The first sentence of the first paragraph is revised to read:

> The components of the epoxy system furnished under these Specifications shall be supplied in separate containers or pre-packaged cartridge kits that are non-reactive with the materials contained.

The second paragraph is revised to read:

> Separate containers shall be marked by permanent marking that identify the formulator, "Component A" (contains the Epoxy Resin) and "Component B" (Contains the Curing Agent), type, grade, class, lot or batch number, mixing instructions and the quantity contained in pounds or gallons as defined by these Specifications.

The following new paragraph is inserted after the second paragraph:

Pre-packaged cartridge kits shall be marked by permanent marking that identify the formulator, type, grade, class, lot or batch number, mixing instructions and the quantity contained in ounces or milliliters as defined by these Specifications.

9-28.AP9

Section 9-28, Signing Materials and Fabrication
April 1, 2019

9-28.2 Manufacturer's Identification and Date

The second sentence is revised to read:

In addition, the width and height dimension, in inches, the Contract number, and the number of the sign as it appears in the Plans shall be placed using 3-inch series C black letters on the back of destination, distance, and large special signs.

9-28.10 Vacant

This section, including title, is revised to read:

9-28.10 Digital Printing

Transparent and opaque durable inks used in digital printed sign messages shall be as recommended by the manufacturer. When properly applied, digital printed colors shall have a warranty life of the base retroreflective sign sheeting. Digital applied colors shall present a smooth surface, free from foreign material, and all messages and borders shall be clear and sharp. Digital printed signs shall conform to 70% of the retroreflective minimum values established for its type and color. Digitally printed signs shall meet the daytime color and luminance, and nighttime color requirements of ASTM D 4956. No variations in color or overlapping of colors will be permitted. Digital printed permanent traffic signs shall have an integrated engineered match component clear protective overlay recommended by the sheeting manufacturer applied to the entire face of the sign. On Temporary construction/maintenance signs printed with black ink only, the protective overlay film is optional, as long as the finished sign has a warranty of a minimum of three years from sign sheeting manufacturer.

All digital printed traffic control signs shall be an integrated engineered match component system. The integrated engineered match component system shall consist of retroreflective sheeting, durable ink(s), and clear overlay film all from the same manufacturer applied to aluminum substrate conforming to Section 9-28.8.

The sign fabricator shall use an approved integrated engineered match component system as listed on the Qualified Products List (QPL). Each approved digital printer shall only use the compatible retroreflective sign sheeting manufacturer's engineered match component system products.

Each retroreflective sign sheeting manufacturer/integrated engineered match component system listed on the QPL shall certify a department approved sign fabricator is approved to operate their compatible digital printer. The sign fabricator shall re-certify annually with the retroreflective sign manufacturer to ensure their digital printer is still meeting manufacturer's specifications for traffic control signs. Documentation of each re-certification shall be submitted to the QPL Engineer annually.

9-28.11 Hardware

The last paragraph is revised to read:

> All steel parts shall be galvanized in accordance with AASHTO M111. Steel bolts and related connecting hardware shall be galvanized in accordance with ASTM F 2329.

9-28.14(2) Steel Structures and Posts

The first sentence of the third paragraph is revised to read:

> Anchor rods for sign bridge and cantilever sign structure foundations shall conform to Section 9-06.5(4), including Supplemental Requirement S4 tested at -20°F.

In the second sentence of the fourth paragraph, “AASHTO M232” is revised to read “ASTM F 2329”.

The first sentence of the fifth paragraph is revised to read:

> Except as otherwise noted, steel used for sign structures and posts shall have a controlled silicon content of either 0.00 to 0.06 percent or 0.15 to 0.25 percent.

The last sentence of the last paragraph is revised to read:

> If such modifications are contemplated, the Contractor shall submit a Type 2 Working Drawing of the proposed modifications.

9-29.AP9

Section 9-29, Illumination, Signal, Electrical
April 1, 2019

9-29.1 Conduit, Innerduct, and Outerduct

This section is supplemented with the following new subsections:

9-29.1(10) Pull Tape

Pull tape shall be pre-lubricated polyester pulling tape. The pull tape shall have a minimum width of ½-inch and a minimum tensile strength of 500 pounds. Pull tape may have measurement marks.

9-29.1(11) Foam Conduit Sealant

Foam conduit sealant shall be self-expanding waterproof foam designed to prevent both water and pest intrusion. The foam shall be designed for use in and around electrical equipment, including both insulated and bare conductors.

9-29.2(1) Junction Boxes

The first paragraph is revised to read:

> For the purposes of this Specification concrete is defined as portland cement or blended hydraulic cement concrete and non-concrete is all others.

9-29.2(1)A2 Non-Concrete Junction Boxes

The first paragraph is revised to read:

Material for the non-concrete junction boxes shall be of a quality that will provide for a similar life expectancy as portland cement or blended hydraulic cement concrete in a direct burial application.

9-29.2(2)A Standard Duty Cable Vaults and Pull Boxes

In the table in the last paragraph, the fourth, fifth and sixth rows are revised to read:

Slip Resistant Lid	ASTM A36 steel
Frame	ASTM A36 steel
Slip Resistant Frame	ASTM A36 steel

9-29.3(2)A1 Single Conductor Current Carrying

This second sentence is revised to read:

Insulation shall be XLP (cross-linked polyethylene) or EPR (Ethylene Propylene Rubber), Type USE (Underground Service Entrance) or USE-2, and rated for 600-volts or higher.

9-29.6 Light and Signal Standards

In the first sentence of the third paragraph, “AASHTO M232” is revised to read “ASTM F 2329”.

Item number 2 of the last paragraph is revised to read:

2. The steel light and signal standard fabricator’s shop drawing submittal, including supporting design calculations, submitted as a Type 2E Working Drawing in accordance with Section 8-20.2(1) and the Special Provisions.

9-29.6(1) Steel Light and Signal Standards

In the second paragraph, “AASHTO M232” is revised to read “ASTM F 2329”.

The first sentence of the last paragraph is revised to read:

Steel used for light and signal standards shall have a controlled silicon content of either 0.00 to 0.06 percent or 0.15 to 0.25 percent.

9-29.6(5) Foundation Hardware

In the last paragraph, “AASHTO M232” is revised to read “ASTM F 2329”.

9-29.10(1) Conventional Roadway Luminaires

This section is revised to read:

All conventional roadway luminaires shall meet 3G vibration requirements as described in ANSI C136.31.

All luminaires shall have housings fabricated from aluminum. The housing shall be painted flat gray, SAE AMS Standard 595 color chip No. 26280, unless otherwise specified in the Contract. Painted housings shall withstand a 1,000 hour salt spray test as specified in ASTM B117.

Each housing shall include a four bolt slip-fitter mount capable of accepting a nominal 2" tenon and adjustable within +/- 5 degrees of the axis of the tenon. The clamping bracket(s) and the cap screws shall not bottom out on the housing bosses when adjusted within the +/- 5 degree range. No part of the slipfitter mounting brackets on the luminaires shall develop a permanent set in excess of 0.2 inch when the cap screws used for mounting are tightened to a torque of 32 foot-pounds. Each luminaire shall include leveling reference points for both transverse and longitudinal adjustment.

All luminaires shall include shorting caps when shipped. The caps shall be removed and provided to the Contracting Agency when an alternate control device is required to be installed in the photocell socket. House side shields shall be included when required by the Contract. Order codes shall be modified to the minimum extent necessary to include the option for house side shields.

This section is supplemented with the following new subsections:

9-29.10(1)A High Pressure Sodium (HPS) Conventional Roadway Luminaires

HPS conventional roadway luminaires shall meet the following requirements:

1. General shape shall be "cobrahead" style, with flat glass lens and full cutoff optics.

2. Light pattern distribution shall be IES Type III.

3. The reflector of all luminaires shall be of a snap-in design or secured with screws. The reflector shall be polished aluminum or prismatic borosilicate glass.

4. Flat lenses shall be formed from heat resistant, high-impact, molded borosilicate or tempered glass.

5. The lens shall be mounted in a doorframe assembly, which shall be hinged to the luminaire and secured in the closed position to the luminaire by means of an automatic latch. The lens and doorframe assembly, when closed, shall exert pressure against a gasket seat. The lens shall not allow any light output above 90 degrees nadir. Gaskets shall be composed of material capable of withstanding the temperatures involved and shall be securely held in place.

6. The ballast shall be mounted on a separate exterior door, which shall be hinged to the luminaire and secured in the closed position to the luminaire housing by means of an automatic type of latch (a combination hex/slot stainless steel screw fastener may supplement the automatic-type latch).

7. Each luminaire shall be capable of accepting a 150, 200, 250, 310, or 400 watt lamp complete and associated ballast. Lamps shall mount horizontally.

9-29.10(1)B Light Emitting Diode (LED) Conventional Roadway Luminaires

LED Conventional Roadway Luminaires are divided into classes based on their equivalent High Pressure Sodium (HPS) luminaires. Current classes are 200W, 250W, 310W, and 400W. LED luminaires are required to be pre-approved in order to verify their photometric output. To be considered for pre-approval, LED luminaires must meet the requirements of this section.

LED luminaires shall include a removable access door, with tool-less entry, for access to electronic components and the terminal block. The access door shall be removable, but include positive retention such that it can hang freely without disconnecting from the luminaire housing. LED drivers may be mounted either to the interior of the luminaire housing or to the removable door itself.

LED drivers shall be removable for user replacement. All internal modular components shall be connected by means of mechanical plug and socket type quick disconnects. Wire nuts may not be used for any purpose. All external electrical connections to the luminaire shall be made through the terminal block.

LED luminaires shall include a 7-pin NEMA photocell receptacle. The LED driver(s) shall be dimmable from ten volts to zero volts. LED output shall have a Correlated Color Temperature (CCT) of 4000K nominal (4000-4300K) and a Color Rendering Index (CRI) of 70 or greater. LED output shall be a minimum of 85% at 75,000 hours at 25 degrees Celsius.

LED luminaires shall be available for 120V, 240V, and 480V supply voltages. Voltages refer to the supply voltages to the luminaires present in the field. LED power usage shall not exceed the following maximum values for the applicable wattage class:

Class	Max. Wattage
200W	110W
250W	165W
310W	210W
400W	275W

Only one brand of LED conventional roadway luminaire may be used on a Contract. They do not necessarily have to be the same brand as any high-mast, underdeck, or wall-mount luminaires when those types of luminaires are specified in the Contract. LED luminaires shall include a standard 10 year manufacturer warranty.

The list of pre-approved LED Conventional Roadway Luminaires is available at http://www.wsdot.wa.gov/Design/Traffic/ledluminaires.htm.

9-29.10(2) Decorative Luminaires

This section, including title, is revised to read:

9-29.10(2) Vacant

9-29.12 Electrical Splice Materials

This section is supplemented with the following new subsections:

9-29.12(3) Splice Enclosures

9-29.12(3)A Heat Shrink Splice Enclosure

Heat shrink splice enclosures shall be medium or heavy wall cross-linked polyolefin, meeting the requirements of AMS-DTL-23053/15, with thermoplastic adhesive sealant. Heat shrink splices used for “wye” connections require rubber electrical mastic tape.

9-29.12(3)B Molded Splice Enclosure

Molded splice enclosures shall use epoxy resin in a clear rigid plastic mold. The material used shall be compatible with the insulation material of the insulated conductor or cable. The component materials of the resin insulation shall be packaged ready for convenient mixing without removing from the package.

9-29.12(4) Re-Enterable Splice Enclosure

Re-enterable splice enclosures shall use either dielectric grease or a flexible resin contained in a two-piece plastic mold. The mold shall either snap together or use stainless steel hose clamps.

9-29.12(5) Vinyl Electrical Tape for Splices

Vinyl electrical tape in splicing applications shall meet the requirements of MIL-I-24391C.

9-29.12(1) Illumination Circuit Splices

This section is revised to read:

Underground illumination circuit splices shall be solderless crimped connections capable of securely joining the wires, both mechanically and electrically, as defined in Section 8-20.3(8). Aerial illumination splices shall be solderless crimp connectors or split bolt vice-type connectors.

9-29.12(1)A Heat Shrink Splice Enclosure

This section is deleted in its entirety.

9-29.12(1)B Molded Splice Enclosure

This section is deleted in its entirety.

9-29.12(2) Traffic Signal Splice Material

This section is revised to read:

Induction loop splices and magnetometer splices shall use an uninsulated barrel-type crimped connector capable of being soldered.

9-29.13(10)D Cabinets for Type 170E and 2070 Controllers

The first sentence of item number 4 is revised to read:

A disposable paper filter element with dimensions of 12” × 16” × 1” shall be provided in lieu of a metal filter.

Item number 6 is revised to read:

6. LED light strips shall be provided for cabinet lighting, powered from the Equipment breaker on the Power Distribution Assembly. Each LED light strip shall be approximately 12 inches long, have a minimum output of 320 lumens, and have a color temperature of 4100K (cool white) or higher. There shall be three light strips for each rack within the cabinet. Lighting shall be ceiling mounted – rack mounted lighting is not permitted. Light strips shall be installed in the locations shown in the Standard Plans. Lighting shall not interfere with the proper operation of any other ceiling mounted equipment. All lighting fixtures above a rack shall energize

automatically when either door to that respective rack is opened. Each door switch shall be labeled “Light”.

Item number 7 is revised to read:

7. Rack mounted equipment shall be as shown in the Standard Plans. The cabinet shall use PDA #2LX and Output File #1LX. Where an Auxiliary Output File is required, Output File #2LX shall also be included.

This section is supplemented with the following new item:

9. The PCB connectors for Field Terminal Blocks FT1 through FT6 on Output Files #1LX and #2LX shall be capable of accepting minimum 14 AWG field wiring, have a pitch of 5.08 mm, and use screw flange type locking to secure the plug and socket connection. The sockets on the Field Terminal Panel shall be secured to the panel such that unplugging a connector will not result in the socket moving or separating from the panel.

9-29.13(11) Traffic Data Accumulator and Ramp Meters

Item number 2 is revised to read:

2. Rack mounted equipment shall be as shown in the Standard Plans.

Item number 3 is revised to read:

3. PDA #3LX shall be furnished with three Model 200 Load Switches installed. PDA #3LX shall be modified to include a second Model 430 transfer relay, mounted on the rear of the PDA and wired as shown in the Standard Plans.

9-29.13(12) ITS Cabinet

This section’s title is revised to read:

Type 331L ITS Cabinet

The first paragraph (excluding the numbered list) is revised to read:

Basic ITS cabinets shall be Model 331L Cabinets, unless otherwise specified in the Contract. Type 331L Cabinets shall be constructed in accordance with the TEES, with the following modifications:

Item number 6 of the first paragraph is revised to read:

6. LED light strips shall be provided for cabinet lighting, powered from the Equipment breaker on the Power Distribution Assembly. Each LED light strip shall be approximately 12 inches long, have a minimum output of 320 lumens, and have a color temperature of 4100K (cool white) or higher. There shall be three light strips for each rack within the cabinet. Lighting shall be ceiling mounted – rack mounted lighting is not permitted. Light strips shall be installed in the locations shown in the Standard Plans. Lighting shall not interfere with the proper operation of any other ceiling mounted equipment. All lighting fixtures above a rack shall energize automatically when either door to that respective rack is opened. Each door switch shall be labeled “Light”.

9-29.16(2)E Painting Signal Heads

In the first sentence, “Federal Standard 595” is revised to read “SAE AMS Standard 595”.

9-29.17 Signal Head Mounting Brackets and Fittings

In the first paragraph, item number 2 under **Stainless Steel** is revised to read:

2. Bands or cables for Type N mount.

9-29.20 Pedestrian Signals

In item 2C of the second paragraph, “Federal Standard 595” is revised to read “SAE AMS Standard 595”.

9-29.24 Service Cabinets

The third sentence of item number 6 is revised to read:

> The dead front cover shall have cutouts for the entire breaker array, with blank covers where no circuit breakers are installed.

Item number 8 is revised to read:

8. Lighting contactors shall meet the requirements of Section 9-29.24(2).

The last sentence of item number 10 is revised to read:

> Dead front panels shall prevent access to any exposed, live components, and shall cover all equipment except for circuit breakers (including blank covers), the photocell test/bypass switch, and the GFCI receptacle.

9-29.24(2) Electrical Circuit Breakers and Contactors

This section is revised to read:

> All circuit breakers shall be bolt-on type, with the RMS-symmetrical interrupting capacity described in this Section. Circuit breakers for 120/240/277 volt circuits shall be rated at 240 or 277 volts, as applicable, with an interrupting capacity of not less than 10,000 amperes. Circuit breakers for 480 volt circuits shall be rated at 480 volts, and shall have an interrupting capacity of not less than 14,000 amperes.
>
> Lighting contactors shall be rated for tungsten or ballasted (such as sodium vapor, mercury vapor, metal halide, and fluorescent) lamp loads. Contactors for 120/240/277 volt circuits shall be rated at 240 volts maximum line to line voltage, or 277 volts maximum line to neutral voltage, as applicable. Contactors for 480 volt circuits shall be rated at 480 volt maximum line to line voltage.

9-33.AP9

Section 9-33, Construction Geosynthetic
August 6, 2018

9-33.4(1) Geosynthetic Material Approval

The second sentence of the first paragraph is revised to read:

If the geosynthetics material is not listed in the current WSDOT QPL, a Manufacturer's Certificate of Compliance including Certified Test Reports of each proposed geosynthetic shall be submitted to the State Materials Laboratory in Tumwater for evaluation.

The last paragraph is revised to read:

Geosynthetics used as reinforcement in permanent geosynthetic retaining walls, reinforced slopes, reinforced embankments, and other geosynthetic reinforcement applications require proof of compliance with the National Transportation Product Evaluation Program (NTPEP) in accordance with AASHTO Standard Practice R 69, Standard Practice for Determination of Long-Term Strength for Geosynthetic Reinforcement.

9-34.AP9

Section 9-34, Pavement Marking Material
January 7, 2019

9-34.2(2) Color

The first sentence is revised to read:

Paint draw-downs shall be prepared according to ASTM D823.

Each reference to "Federal Standard 595" is revised to read "SAE AMS Standard 595".

9-34.2(3) Prohibited Materials

This section is revised to read:

Traffic paint shall not contain mercury, lead, chromium, diarylide pigments, toluene, chlorinated solvents, hydrolysable chlorine derivatives, ethylene-based glycol ethers and their acetates, nor any other EPA hazardous waste material over the regulatory levels in accordance with CFR 40 Part 261.24.

9-34.2(5) Low VOC Waterborne Paint

The heading "Standard Waterborne Paint" is supplemented with "Type 1 and 2".

The heading "High-Build Waterborne Paint" is supplemented with "Type 4".

The heading "Cold Weather Waterborne Paint" is supplemented with "Type 5".

In the row beginning with "° @90°F", each minimum value is revised to read "60".

In the row beginning with "Fineness of Grind, (Hegman Scale)", each minimum value is revised to read "3".

The last four rows are replaced with the following:

Vehicle Composition	ASTM D 2621	100% acrylic emulsion	100% cross-linking acrylic[4]	100% acrylic emulsion
Freeze-Thaw Stability, KU	ASTM D 2243 and D 562	@ 5 cycles show no coagulation or change in viscosity greater	@ 5 cycles show no coagulation or change in viscosity greater	@ 3 cycles show no coagulation or change in viscosity greater

		than ± 10 KU	than ± 10 KU	than ± 10 KU
Heat Stability	ASTM D 562[2]	± 10 KU from the initial viscosity	± 10 KU from the initial viscosity	± 10 KU from the initial Viscosity
Low Temperature Film Formation	ASTM D 2805[3]	No Cracks*		No Cracks
Cold Flexibility[5]	ASTM D522	Pass at 0.5 in mandrel*		
Test Deck Durability[6]	ASTM D913	≥70% paint retention in wheel track*		
Mud Cracking	(See note 7)	No Cracks	No Cracks	

After the preceding Amendments are applied, the following new column is inserted after the "Standard Waterborne Paint Type 1 and 2" column:

Semi-Durable Waterborne Paint Type 3			
White		**Yellow**	
Min.	**Max.**	**Min.**	**Max.**
Within ± 0.3 of qualification sample			
80	95	80	95
60		60	
77		77	
	65		65
43		43	
	1.25		1.25
3		3	
0.98		0.96	
88		50	
100°		100°	
9.5		9.5	
	10		10
100% acrylic emulsion			
@ 5 cycles show no coagulation or change in viscosity greater than ± 10 KU			
± 10 KU from the initial viscosity			
No Cracks			
Pass at 0.25 in mandrel			
≥70% paint retention in wheel track			
No Cracks			

The footnotes are supplemented with the following:

[4]Cross-linking acrylic shall meet the requirements of federal specification TT-P-1952F Section 3.1.1.

[5]Cold Flexibility: The paint shall be applied to an aluminum panel at a wet film thickness of 15 mils and allowed to dry under ambient conditions (50±10% RH and 72±5 ˚F) for 24 hours. A cylindrical mandrel apparatus (in accordance with ASTM D522 method B) shall be put in a 40°F refrigerator when the paint is drawn down. After 24 hours, the aluminum panel with dry paint shall be put in the 40°F refrigerator with the mandrel apparatus for 2 hours. After 2 hours, the panel and test apparatus shall be removed and immediately tested to according to ASTM D522 to evaluate cold flexibility. Paint must show no evidence of cracking, chipping or flaking when bent 180 degrees over a mandrel bar of specified diameter.

[6]NTPEP test deck, or a test deck conforming to ASTM D713, shall be conducted for a minimum of six months with the following additional requirements: it shall be applied at 15 wet mils to a test deck that is located at 40N latitude or higher with at least 10,000 ADT and which was applied during the months of September through November.

[7]Paint is applied to an approximately 4”x12” aluminum panel using a drawdown bar with a 50 mil gap. The coated panel is allowed to dry under ambient conditions (50±10% RH and 72±5 ˚F) for 24 hours. Visual evaluation of the dry film shall reveal no cracks.

9-34.3 Plastic

In the first sentence of the last paragraph, “Federal Standard 595” is revised to read “SAE AMS Standard 595”.

9-34.3(2) Type B – Pre-Formed Fused Thermoplastic

In the last two paragraphs, each reference to “Federal Standard 595” is revised to read “SAE AMS Standard 595”.

9-34.3(4) Type D – Liquid Cold Applied Methyl Methacrylate

The Test Method value for **Adhesion to PCC or HMA, psi** is revised to read “ASTM D4541[1]”.

9-34.4 Glass Beads for Pavement Marking Materials

In the Test Method column of the table titled Metal Concentration Limits, “EPA 3052 SW-846 6010C” is revised to read “EPA 3052 SW-846 6010D”.

9-34.5(1) Temporary Pavement Marking Tape – Short Duration

This section, including title, is revised to read:

9-34.5(1) Temporary Pavement Marking Tape – Short Duration (Removable)
Temporary pavement marking tape for short duration (usage is for up to two months) shall conform to ASTM D4592 Type I except that black tape, black mask tape and the black portion of the contrast removable tape, shall be non-reflective.

9-34.5(2) Temporary Pavement Marking Tape – Long Duration

This section’s title is revised to read:

Temporary Pavement Marking Tape – Long Duration (Non-Removable)

The first sentence is revised to read:

Temporary pavement marking tape for long duration (usage is for greater than two months and less than one year) shall conform to ASTM D4592 Type II.

ASTM E2176 is deleted from the second sentence.

9-34.7(1) Requirements

The first paragraph is revised to read:

Field performance evaluation is required for low VOC solvent-based paint per Section 9-34.2(4), Type A – liquid hot applied thermoplastic per Section 9-34.3(1), Type B – preformed fused thermoplastic per Section 9-34.3(2), Type C – cold applied preformed

tape per Section 9-34.3(3), and Type D – liquid applied methyl methacrylate per Section 9-34.3(4).

The last paragraph is deleted.

9-34.7(1)C Auto No-Track Time

The first paragraph is revised to read:

Auto No-Track Time will only be required for low VOC solvent-based paint in accordance with Section 9-34.2(4).

The second and third sentences of the second paragraph are deleted.

PART 5

WAGE RATES

PART 6

PLANS

PART 7

APPENDIX

APPENDIX A

SUPPLEMENTAL BIDDER RESPONSIBILITY CRITERIA

APPENDIX A

SUPPLEMENTAL BIDDER RESPONSIBILITY CRITERIA FORMS
NE 42ND STREET/91ST AVENUE NE STORMWATER AND UGC PROJECT

These forms shall be completed in their entirety and submitted by the apparent two lowest Bidders to the Town of Yarrow Point by 12:00 p.m. (noon) of the second business day following the bid submittal deadline.

Failure to submit and meet the requirements as stated in Section 1-02 of the Special Provisions shall be grounds for rejection of the bid. The Town of Yarrow Point will be the sole judge in determining if the prospective contractor meets the minimum experience requirements.

Contractor:

Name: _____

Address: _____

Phone: _____

Contact Person: _____

2. Delinquent State Taxes

Instructions to Bidders: Check the appropriate box

☐ The Bidder does not owe delinquent taxes to the Washington State Department of Revenue.

☐ Alternatively, the Bidder does owe delinquent taxes to the Washington State Department of Revenue.

If the Bidder owes delinquent taxes, they must submit a written payment plan approved by the Department of Revenue, to the Contracting Agency.

_____ _____

(Date) (Signature)

_____

(Print Name)

_____

(Title)

3. Claims Against Retainage and Bonds:

Instructions to Bidders: Check the appropriate box

☐ The Bidder has not had claims against retainage and bonds in the 3 years prior to the bid submittal date.

☐ Alternatively, the Bidder has had claims against retainage and bonds in the 3 years prior to the bid submittal date.

If the Bidder has had claims against retainage and bonds in the 3 years prior to the bid submittal date, submit a list of public works projects completed during this period that have had claims against retainage and bonds and include name of Project, contact information for the Owner, a list of claims filed against retainage and/or payment bond for any of the projects listed; and a written explanation of circumstances surrounding each claim and the ultimate resolution of the claim.

_____ _____
(Date) (Signature)

_____
(Print Name)

_____
(Title)

4. Public Bidding Crime:

Instructions to Bidders: Check the appropriate box

☐ The undersigned certifies that the Bidder and/or its Owners have not been convicted of a crime involving bidding on a public works contract in the 5 years prior to the bid submittal date.

☐ Alternatively, the undersigned confirms that the Bidder and/or its Owners have been convicted of a crime involving bidding on a public works contract in the 5 years prior to the bid submittal date.

If the Bidder and/or its Owners have been convicted of a crime involving bidding on a public works contract, provide a written explanation identifying the date of the conviction and a description of the circumstances surrounding the conviction.

_____ _____
(Date) (Signature)

_____
(Print Name)

_____
(Title)

5. Termination for Cause/Termination for Default

Instructions to Bidders: Check the appropriate box

☐ The undersigned certifies that the Bidder has not had any public works contracts terminated for cause or terminated for default by a government agency in the 5 years prior to the bid submittal date.

☐ Alternatively, the undersigned confirms that the Bidder has had public works contracts terminated for cause or terminated for default by a government agency in the 5 years prior to the bid submittal date.

If the Bidder has had any public works contracts terminated for cause or terminated for default in the 5 years prior to the bid submittal date, provide a written explanation for all contracts terminated for cause or terminated for default by identifying the project contract that was terminated, the government agency which terminated the Contract, the date of the termination, and a description of the circumstances surrounding the termination.

_____ _____
(Date) (Signature)

_____
(Print Name)

_____
(Title)

6. Lawsuits

Instructions to Bidders: Check the appropriate box

☐ The undersigned certifies that the Bidder has not had any lawsuits with judgments entered against the Bidder in the 5 years prior to the bid submittal date that demonstrate a pattern of failing to meet the terms of contracts.

☐ Alternatively, the undersigned confirms that the Bidder has had any lawsuits with judgments entered against the Bidder in the 5 years prior to the bid submittal date that demonstrate a pattern of failing to meet the terms of contracts.

If the Bidder has had any lawsuits with judgments entered against the Bidder in the 5 years prior to the bid submittal date that demonstrate a pattern of failing to meet the terms of contracts, submit a list of lawsuits along with a written explanation of the circumstances surrounding each lawsuit. The Contracting Agency shall evaluate these explanations to determine whether the lawsuits demonstrate a pattern of failing to meet the terms of contracts.

_____ _____
(Date) (Signature)

_____
(Print Name)

_____
(Title)

7. Contract Time (Liquidated Damages)

Instructions to Bidders: Check the appropriate box

☐ The undersigned certifies that the Bidder has not had liquidated damages assessed on any project it has completed in the 5 years prior to the bid submittal date.

☐ Alternatively, the undersigned confirms that the Bidder has had liquidated damages assessed on projects in the 5 years prior to the bid submittal date.

If the Bidder has had liquidated damages assessed against projects in the 5 years prior to the bid submittal dated, submit a list of projects along with Owner contact information, and number of days assessed liquidated damages. The Contracting Agency shall determine whether the Contractor has a pattern of failing to complete projects within Contract Time.

_____ _____
(Date) (Signature)

_____
(Print Name)

_____
(Title)

8. Capacity and Experience

The Bidder shall have sufficient current capacity and the Project Superintendent assigned to the Project shall have experience to meet the requirements of this Project. The Bidder and Project Superintendent shall have successfully completed at least two projects, of a similar size and scope, during the 5-year period immediately preceding the bid submittal deadline for this project. Similar size is defined as a minimum of 70 percent of the bid amount submitted by the Bidder.

A. Capacity

i. Gross dollar amount of work currently under contract:

_____

ii. Gross dollar amount of contracts currently not completed:

_____

iii. List five major pieces of equipment which are anticipated to be used on this project by the Contractor and note which items are owned by the Contractor and which are to be leased or rented from others:

_____

_____

iv. Number of superintendents on Bidder's staff:

_____

B. Experience

i. General character of work performed by firm:

_____

ii. Identify who will be the superintendent on this project and years of experience. Also, list the number of years this person has been with your firm.

_____

iii. Similar Size and Scope Projects Completed in the Past 5 Years

#1 Owner's Name and Contact Information: _____
_____
_____
Owner is a Government Agency? ___ Yes ____ No
Superintendent's Name: _____
Project Name: _____
Awarded Contract Amount: _____
Final Contract Amount: _____
Completion Date: _____
Project Description: _____
_____
_____
_____

#2 Owner's Name and Contact Information: _____
_____
_____
Owner is a Government Agency? ___ Yes ____ No
Superintendent's Name: _____
Project Name: _____
Awarded Contract Amount: _____
Final Contract Amount: _____
Completion Date: _____
Project Description: _____
_____
_____
_____

#3 Owner's Name and Contact Information: _____
_____
_____
Owner is a Government Agency? ___ Yes ____ No
Superintendent's Name: _____
Project Name: _____
Awarded Contract Amount: _____
Final Contract Amount: _____
Completion Date: _____
Project Description: _____
_____
_____
_____

APPENDIX B

PROPERTY RELEASE

PROPERTY RELEASE

_____
(Owner's Name)

_____
(Property Address)

_____

DATE:_____

I, _____, owner of _____
(Property Owner's Name) (Property

_____, hereby release
(Description or Address)

_____, from any property
(Contractor's Name)

damage or personal injury resulting from construction adjacent

to or on my property located at _____,
(Property Address)

during construction of the NE 42nd Street/91st Avenue NE Stormwater and UGC Project. My signature below is my acknowledgment and acceptance that my property, as identified above, was returned to a satisfactory condition.

Name: _____

Signed: _____

Address: _____

_____

Phone: _____

APPENDIX C

UTILITY PROVIDED STRUCTURES

2.4.4 - Handhole 173024:

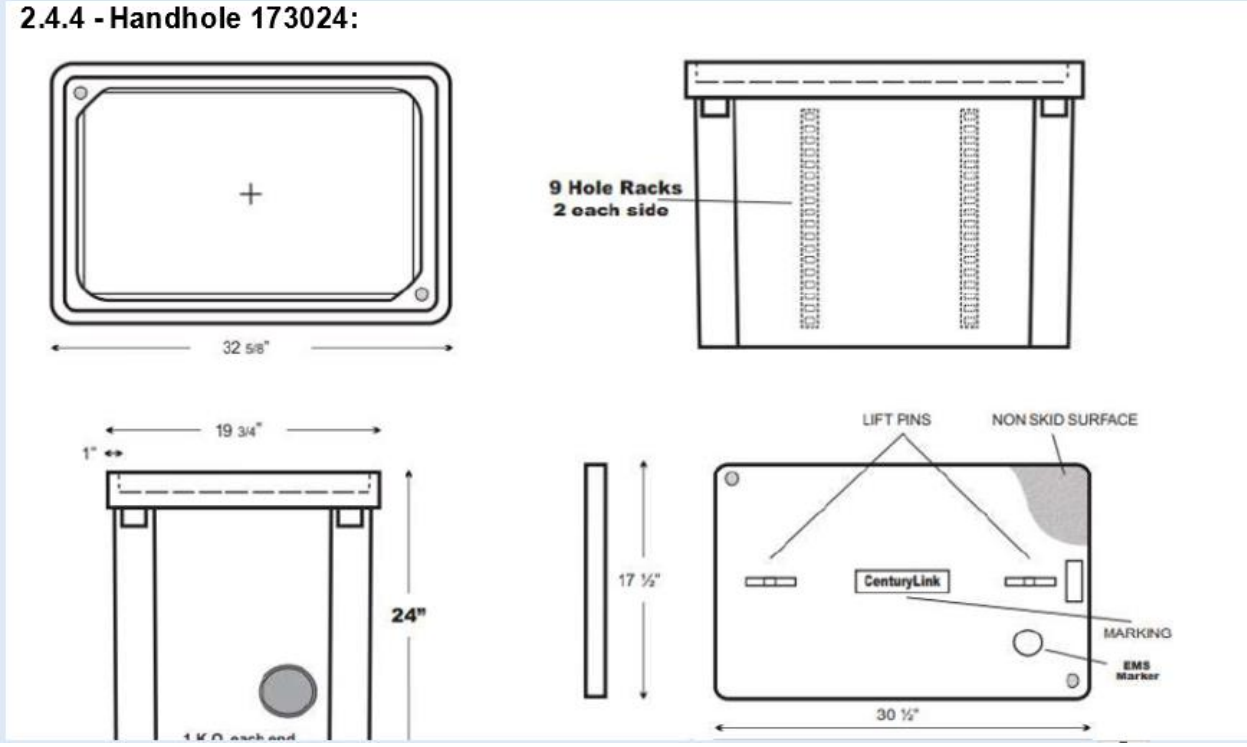

173024 is a heavy duty (Incidental Traffic - Parking Lot, Sidewalk) POLYMER CONCRETE ring and cover, tapered walled handhole, no floor for access. The lid is flush mounted and has a skid resistant texture. Approximate weight is 175 lbs. Manufacturer: Martin Enterprises

Description	Size	Load Rating	Material Code	Manufacturer Part Number	Configuration
HANDHOLE PC T15 17X30X24 SL ST TES 4RK NDT 2KO NPE NFL CP	17"x 30"x 24"	Tier 15 (20k)	1359739	173024PCT15K-CTL	C-STRCTR-VAULT-CTL-173024

CenturyLink - Structure

Flowerpot/ Carson

Flowerpot/ Carson

264-TA

CenturyLink - Structure

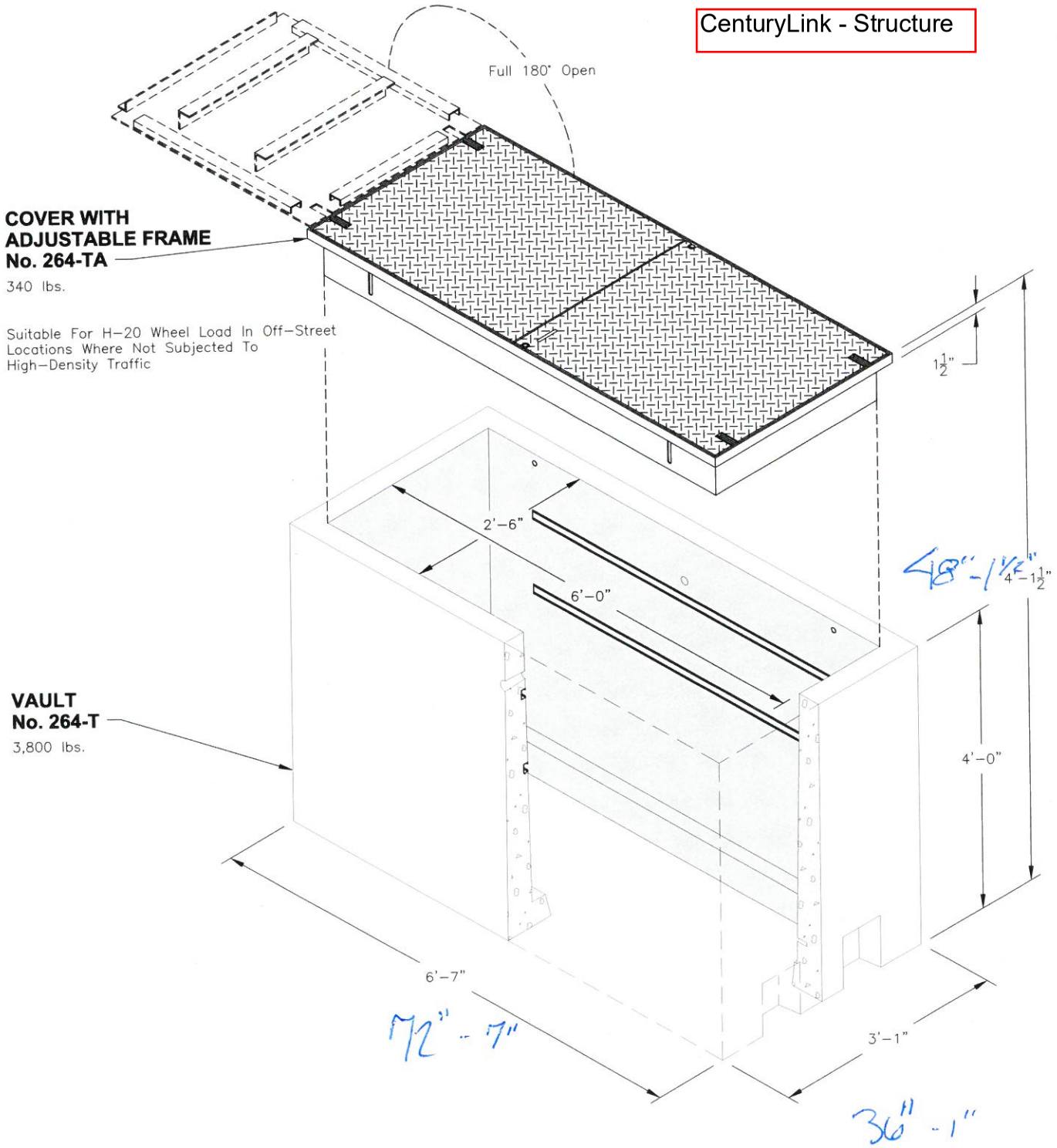

QWEST PID# 2306738

Non Skid Covers Available

FOR DETAILS, SEE REVERSE SIDE >>

Items Shown Are Subject To Change Without Notice
Issue Date: January 2006

Mailing Address
PO Box 588
Auburn, WA 98071

Phone: 800.892.1538
Fax: 253.735.4201
Email: uvauburn@oldcastleprecast.com

uvauburn.com
a division of Oldcastle Precast, Inc.

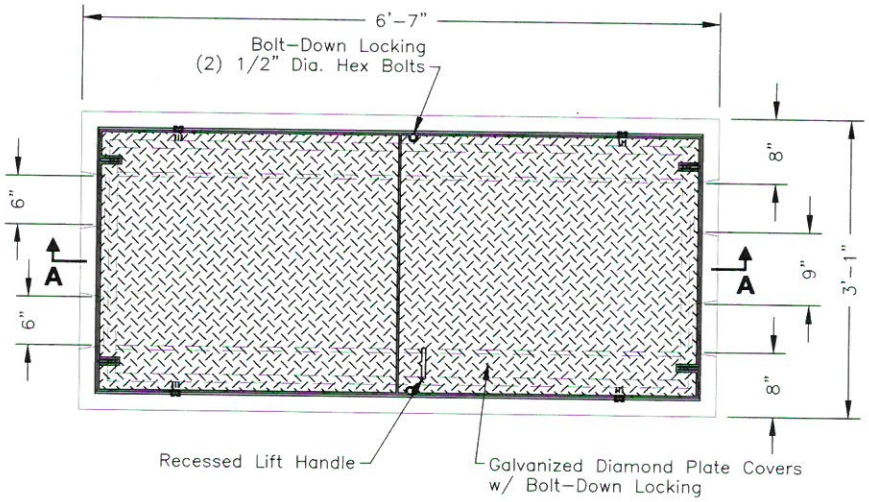

PLAN VIEW

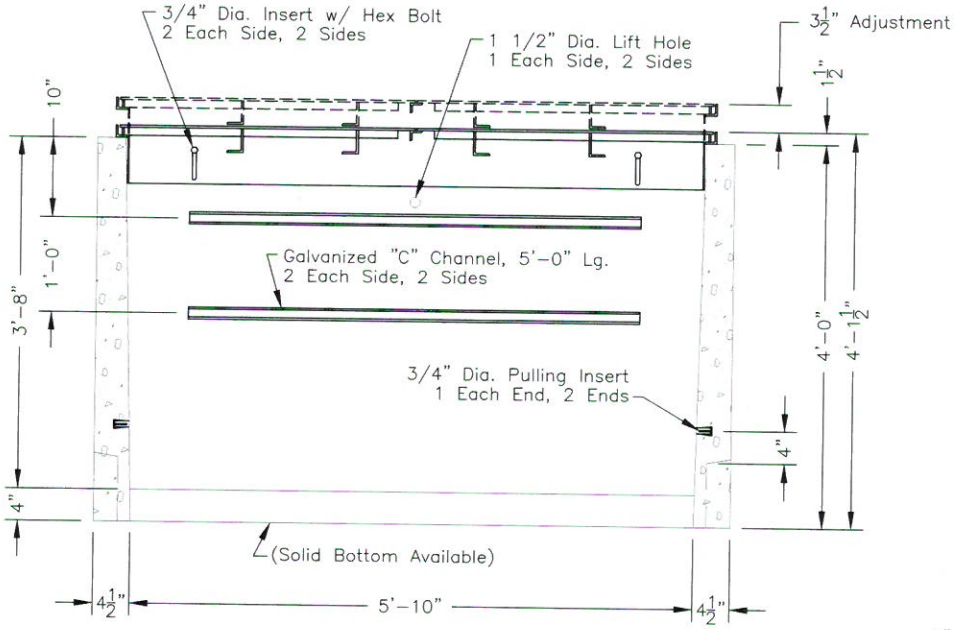

SECTION AA

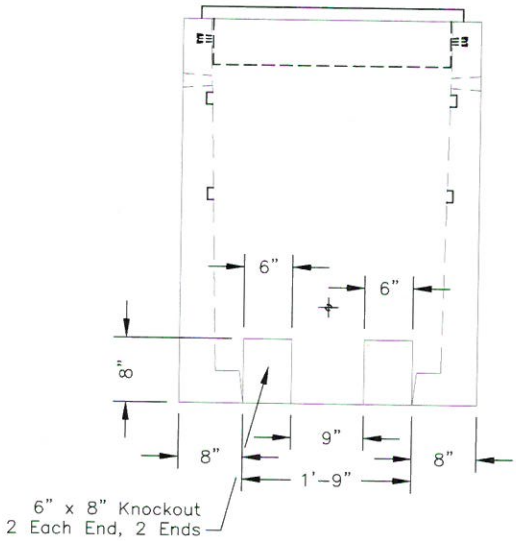

END VIEW

QWEST PID# 2306738

SCALE: 1/2" = 1'-0"

Small Handholes_Place landscape only_Carson box

18” - Depth

Small Handholes_Place landscape only_Carson box

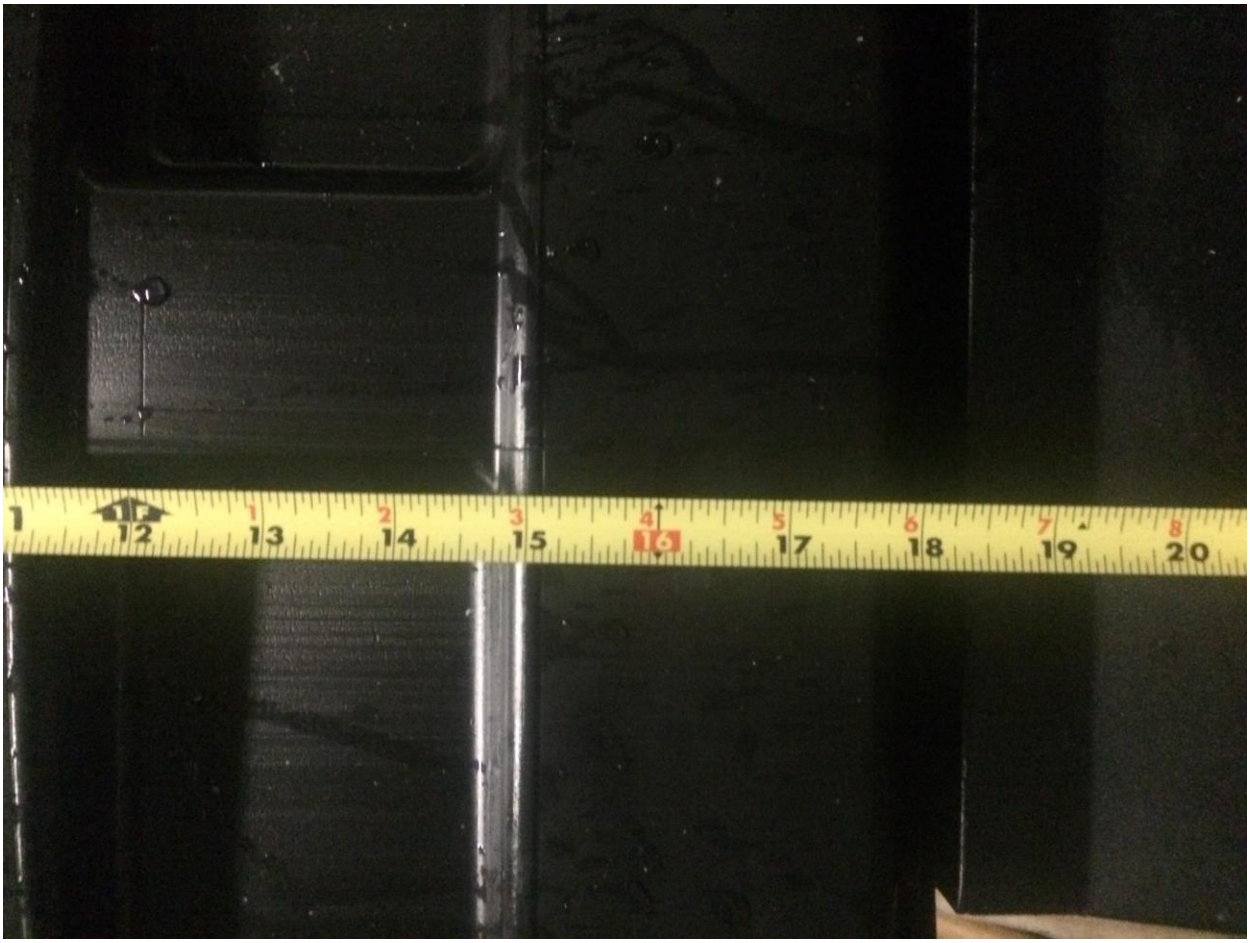

18” Depth

Small Handholes_Place landscape only_Carson box

20” Length

Small Handholes_Place landscape only_Carson box

Small Handholes_Place landscape only_Carson box

16” Width

Comcast - Structure

UTILITY VAULT™

3642-LA

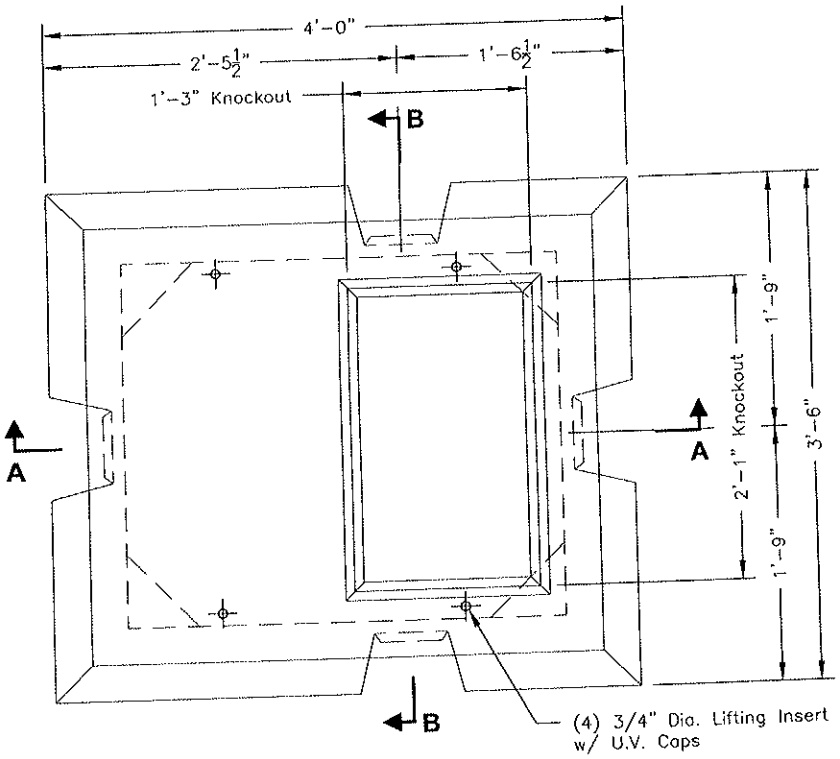

PLAN VIEW

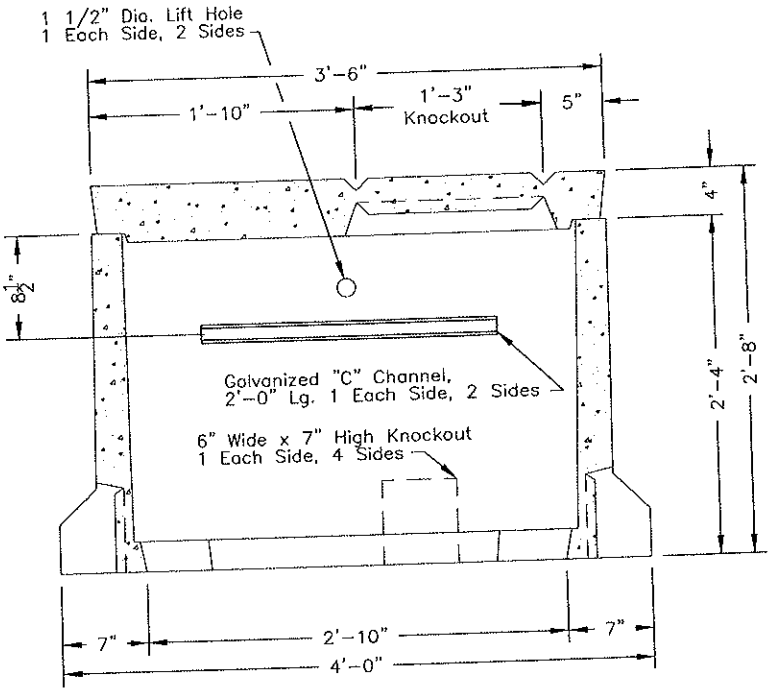

SECTION AA

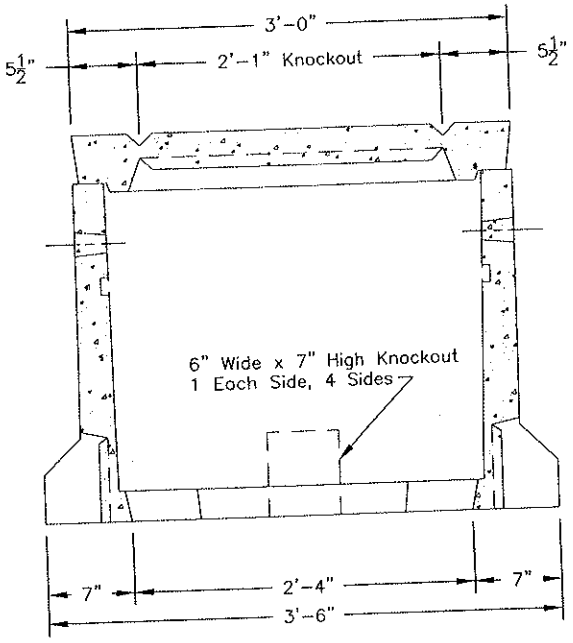

SECTION BB

SCALE: 3/4" = 1'-0"

uvauburn.com

CHANNELL
Where The Industry Connects.®

ORDERING GUIDE

Comcast - Structure

CANADIAN EDITION

Shutter Box Series Grade Level Boxes (SGLB™)

Unsurpassed "I-Beam" Strength

Inspired by the below-ground shutter boxes used for utilities throughout Europe, Channell's "Shutter Box" Series SGLB boxes provide the highest-performance standards in the industry for thermoplastic subsurface enclosures.

One of the major features of the boxes is the straight sidewall "I-Beam" construction that, together with the high rib design, greatly increases the cover load bearing capacity and sidewall strength. Unlike standard thermoplastic tapered boxes, the "Shutter Box" straight sidewall design allows the cover load to be supported by the complete sidewall, rather than an unsupported "tapered neck." This feature permits the "Shutter Box" Series boxes to be used for a multitude of greenbelt and sidewalk applications. With the additional option of a polymer concrete cover and ring, the boxes exhibit a static vertical load bearing capacity up to 20,000 pounds, making them suitable for sidewalk and driveway applications.

A full range of unique options (patents pending) support this product, including a two-position swing-arm bracket, the universal L-Bolt™ locking feature and a Split Cover option with enclosure plug. Three sets of factory-installed threaded studs permit installation of optional hot-dipped galvanized racks, sidewall mounting brackets, and a thermoplastic swing arm assembly equipment mounting plate to accomodate a Bracket Mounted Terminal (BMT®) or fiber tap in the field.

Meets and is qualified to Telcordia GR-902-CORE specifications. Complies with the applicable elements of Western Underground Committee, ANSI / SCTE 77 2002.

SGLB 2436

SGLB 1730

Features

- Straight sidewall "I-Beam" design permits higher load capacity
- High rib design eliminates sidewall deflection in extreme soil conditions and firmly secures the box in the soil
- High quality HDPE waffle-design of box body distributes load over strongest section of "Shutter Box" SGLB wall
- Solid thermoplastic cover, or split cover with the optional two-way enclosure plug allows for quick, hassle-free "snap-in" pedestal upgrade
- Universal "L" bolt security system eliminates the worry of lost cover bolts
- Unique "T" style overlapping cover design prevents soil from interfering with cover removal
- Two winterized drop/access holes are standard in the "Shutter Box" SGLB body
- Cable locator marker can be quickly installed into cover
- Optional "quick connect" polymer concrete covers and mounting rings available to upgrade "Shutter Box" SGLB for higher load bearing requirements when installing boxes in sidewalk or driveway applications
- Three sets of factory-installed studs for field retrofit of racks, brackets and swing arm assembly

The straight sidewall design of the "Shutter Box" Series grade level boxes allows the load-bearing surface to be fully supported by the "I-Beam" strength of the full sidewall. HDPE waffle-design of the box body distributes the cover load over the strongest section of the box wall. Additionally, the sidewall high rib design greatly reduces or eliminates sidewall deflection.

Body Features

Standard Features

Winterized Drop Door (2 places)

Mounting Stud

"L" Bolt Security Latching System

Threaded floating nut assembly

Optional Features

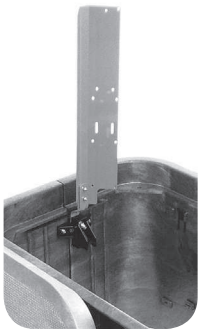

Fiber Tap Mounting Plate

Step Rack w/Universal Mounting Bracket

Marker Locator

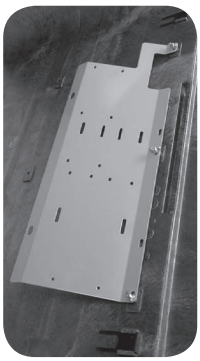

Sidewall Mounting Plate

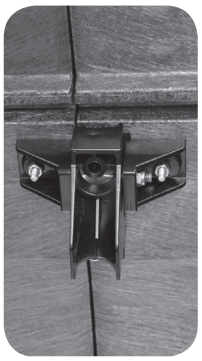

Swing-arm Assembly

Specifications

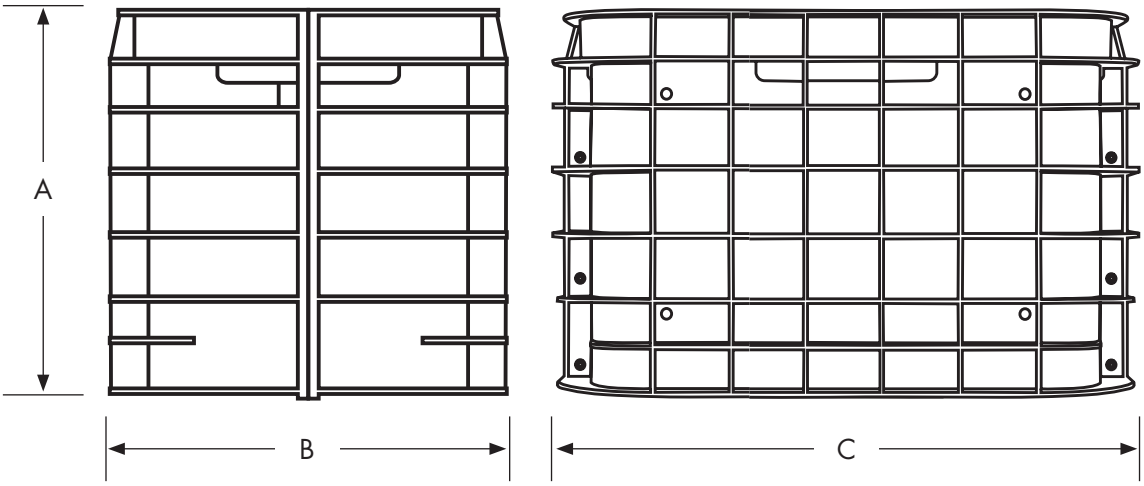

	A	B	C
SGLB1730	24" (609.6mm)	21.75" (552.5mm)	33.25" (845.0mm)
SGLB2436	24" (609.6mm)	28.5" (723.9mm)	40.25" (1022.4mm)

Channell's SGLB1730 and SGLB2436 "Shutter Box" Series SGLBs have the highest strength/deflection ratings in the industry.

	Solid Thermoplastic Cover	Split Thermoplastic Cover	Polymer Concrete with Ring
Application	Greenbelt	Greenbelt	Sidewalk
Static Load	10,000 lbs.	10,000 lbs.	10,000/20,000 lbs.*

**Note: Contact Channell for complete load specifications for polymer concrete cover with ring.*

Cover Types and Options

1 *Standard Thermoplastic Cover*
2 *Thermoplastic Split Cover (with Plug shown)*
3 *Polymer Concrete Ring and Cover* ***(Refer to Ordering Information)***

SGLB2436 box shown with split thermoplastic cover and removable plug.

FTTP SGLB system with MGF1010 housing mounted on SGLB2436 split cover (plug removed).

SGLB2436 box shown with polymer concrete ring and cover installed.

Ordering Information

8 EASY STEPS

SGLB XXXX XX X XXX X A04

Description

1 Specify Cover Size
- 1730 – 17" x 30"
- 2436 – 24" x 36"

2 Select Body Depth
- 24 – 24"
- 48 – 48"

3 Designate Cover Color
- 1 – Green
- 3 – Gray

4 Designate Cover Identification
- B – Broadband
- N – Blank
- T – Telecommunications
- E – Electric
- W – Water

5 Select Cover Type
- 1 – Solid Thermoplastic
- 2 – Split Thermoplastic Cover with 12" x 12" Plug (Available for SGLB2436 Only)
- 4 – Split Thermoplastic Cover with Plug (Not Compatible with Swing or Marker)
- 5 – Polymer Concrete Cover and Ring
- 7 – Polymer Concrete Cover and Ring with Crossbar Racks in Vault (Tier 8)
- 8 – Solid ABS

6 Select Cover Security
- 1 – "L" bolt (Available only on thermoplastic covers)
- 2 – Bolt-Down
- 3 – Penta Bolt

7 Select Racking
- 0 – None (All Bodies are Equipped with Seven MT Studs for Mounting Brackets and Racks)
- 1 – Step Racks (Three 15" racks)
- 2 – Swing-arm with Butterfly Mounting Plate (see BOM)
- 3 – Step Racks and Swing-arm
- 4 – Sidewall Mounting Plate (00452)
- 5 – Swing-arm with Sidewall Mounting Plate and Butterfly Mounting Plate
- 6 – Step Racks (3) with Universal Mounting Bracket
- 7 – Dual Swing-arm
- 8 – Swing-arm Only
- 9 – Crossbar Racks

8 Designate Accessory Options
- A04 – Marker/Locator (Not for Split Lid with Plug or 1730 Bolt-Down)

Example: SGLB2436241T111A04 - Shutter Box Series GLB2436, 24" Depth, Green Cover, Telecommunications Cover Identification, "L" Bolt Security, Step Racks Installed in Body, Marker/Locator Disk (Installed on Cover)

CHANNELL

Where The Industry Connects.®

USA: Channell Commercial Corporation, Temecula, CA • Tel. 800.423.1863 • Fax. 951.296.2322

CANADA: Channell Canada, Inc. • Tel. 905.565.1700 • Fax. 905.565.8080

EUROPE, MIDDLE EAST, AFRICA: Channell Ltd., London, UK • Tel. 44.1689.871522 • Fax. 44.1689.833428

AUSTRALIA, ASIA, PACIFIC RIM: Channell Pty. Ltd., Sydney, Australia • Tel. 61.2.8884.4111 • Fax. 61.2 8814.8841

WORLDWIDE HEADQUARTERS: Channell Commercial Corporation • Tel. 951.719.2600 • 26040 Ynez Road • P.O. Box 9022 • Temecula, CA 92589-9022 USA

www.channell.com

Printed in U.S.A. CH09-113 08095MTA