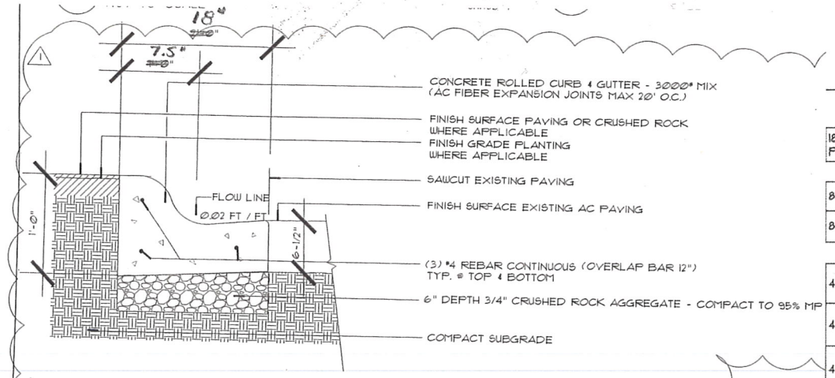

D TYPICAL ROLLED CURB AND GUTTER
NOT TO SCALE
RCURB-GUTR

VALVE BOXES

18" HT, 3-GAL POT	11	3'-0" O.C.
8" HT, 1-GAL POT	46	2'-0" O.C.
8" HT, 1-GAL POT	19	2'-0" O.C.
4-INCH POT		1'-6" O.C.
4-INCH POT		1'-6" O.C.
4-INCH POT		1'-6" O.C.
4-INCH POT		1'-6" O.C.

EXISTING EDGE OF PAVEMENT
EXISTING CATCH BASIN
ALIGN FLOW LINE WITH EXISTING CATCHBASIN
D / L2.0 NEW CONCRETE ROLLED CURB AND GUTTER
~190LF
SAW CUT EDGE OF EXISTING AC PAVEMENT
NEW LOW SHRUB AND GROUNDCOVER PLANTING
NEW LOW SHRUB PLANTING
E / L2.0 2" DEPTH CRUSHED ROCK TOP COAT AT EXISTING SHOULDER
~190LF
D / L2.0 NEW CONCRETE ROLLED CURB AND GUTTER
RAISE AND LEVEL EXISTING VALVE BOXES
EXISTING LIGHT POLE
Phase 2
(2) EXISTING ELECTRICAL BOXES. PROVIDE AND INSTALL NEW VINYL GRAPHIC WRAPS ON FRONT DOORS AND SIDE PANELS. ELECTRONIC PHOTO OR GRAPHIC DESIGN ARTWORK PROVIDED BY TOWN OF YARROW POINT.
EXISTING ELECTRICAL METER
Phase 3
EXISTING MANHOLE
EXISTING ELECTRICAL VAULT WITH METAL LID
MATCHLINE
EXISTING ELECTRICAL VAULT WITH METAL LIDS

EXISTING ELECTRICAL VAULT WITH METAL LIDS
MATCHLINE
EXISTING ROCKERY
NEW LOW SHRUB PLANTING
100'-8"DI 1984
NEW LOW GROUNDCOVER PLANTING
RAISE AND LEVEL EXISTING VALVE BOX
EXISTING WOOD FENCE
EXISTING EVERGREEN HEDGE
Phase 1
2'-6" 5'
NEW LOW SHRUB AND GROUNDCOVER PLANTING
D / L2.0 NEW CONCRETE ROLLED CURB AND GUTTER
~190LF
EXISTING SIGN ON POST
E / L2.0 NEW 4" DEPTH CRUSHED ROCK PATH
EXISTING BARK MULCH PATH
EXISTING LIGHT POLE
TW 165.25 BW 160.0
TW 166.25 BW 160.75
160
161
TW 166.25 BW 161.75
EXISTING STD. CURB AND GUTTER
SAWCUT AND REMOVE SECTION OF EXISTING CONCRETE CURB TO MATCH PROPOSED PATH WIDTH AND FLUSH TOP ELEVATION.
FLUSH
NEW CURB TRANSITION FROM EXISTING ROLLED CURB TO NEW ROLLED CURB.

SCALE: 1"=5'-0"
0 5 10 20
N

JGM
LANDSCAPE ARCHITECTS
INCORPORATED P.S.
LANDSCAPE ARCHITECTURE
URBAN DESIGN
SITE PLANNING
PARKS AND
RECREATION PLANNING
12610 NE 104TH ST.
KIRKLAND WA 98033
PH: 425.454.5723
FX: 425.822.3525
E-: jgm@jgm-inc.com

Yarrow Point Entry Drive Improvements
Yarrow Point, WA

REVISIONS/DRAWING ISSUES:
1 2-12-2020
2 3-12-2020

Drawn by: CL
Checked by: CL

STATE OF WASHINGTON REGISTERED LANDSCAPE ARCHITECT
CERTIFICATE NO. 442

DATE: 2-5-2020
LAST UPDATE:
CAD FILE:

DRAWING TITLE
PLANTING PLAN

SHEET NUMBER
L1.0

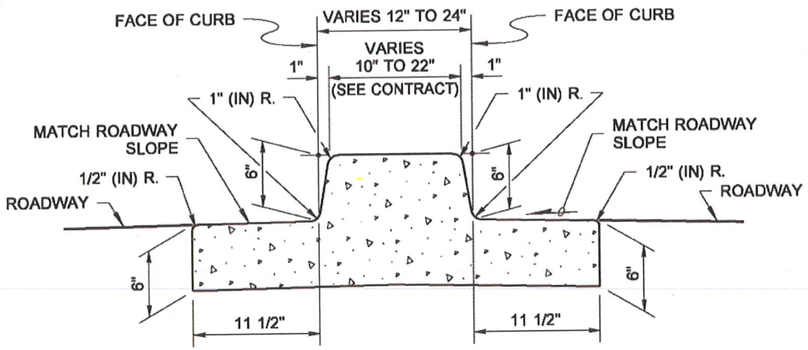

DUAL-FACED CEMENT CONCRETE TRAFFIC CURB AND GUTTER

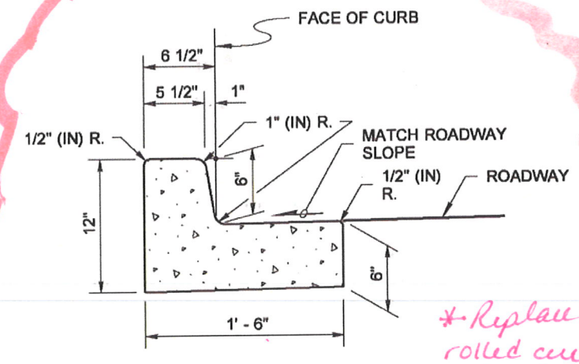

CEMENT CONCRETE TRAFFIC CURB AND GUTTER

*-Replace w/ 1'-6" wide rolled curb & gutter w/ #4 rebar as provided in town detail (3 total) sheet.

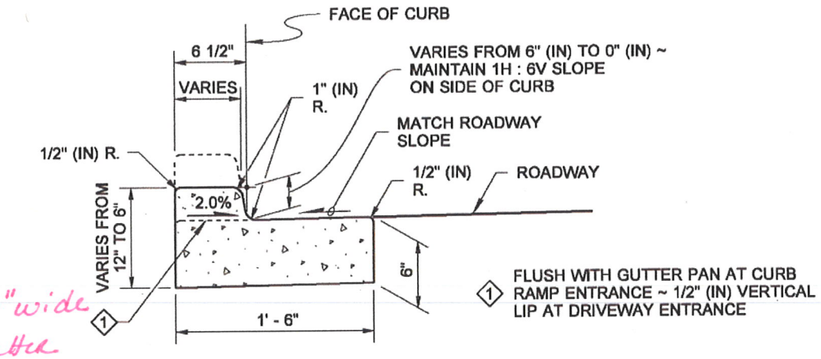

DEPRESSED CURB SECTION

AT CURB RAMPS AND DRIVEWAY ENTRANCES

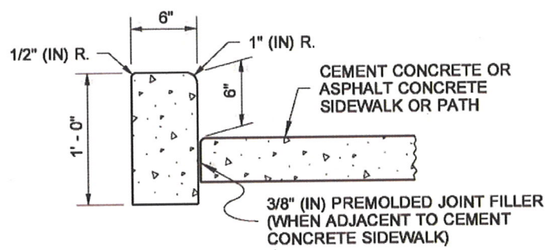

CEMENT CONCRETE PEDESTRIAN CURB

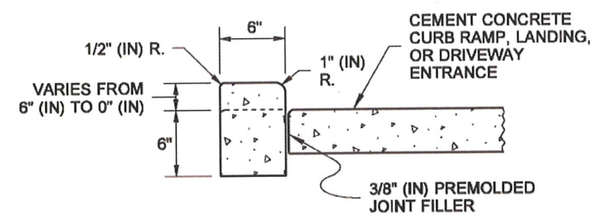

CEMENT CONCRETE PEDESTRIAN CURB

AT CURB RAMPS, LANDINGS, AND DRIVEWAY ENTRANCES

NOTE

1. See **Standard Plan F-30.10** for Curb Expansion and Contraction Joint spacing and see **Standard Specification Sections 8-04 and 9-04** for additional requirements.

DRAWN BY: FERN LIDDELL

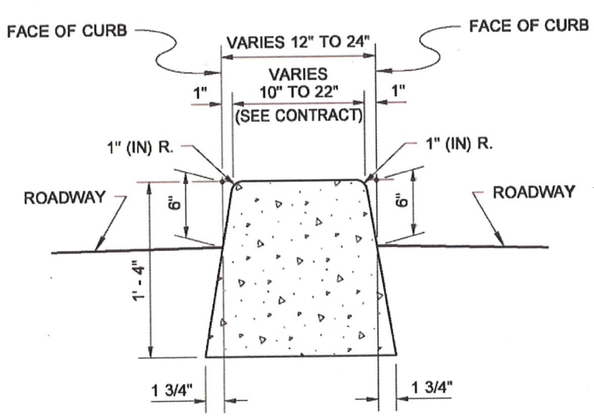

DUAL-FACED CEMENT CONCRETE TRAFFIC CURB

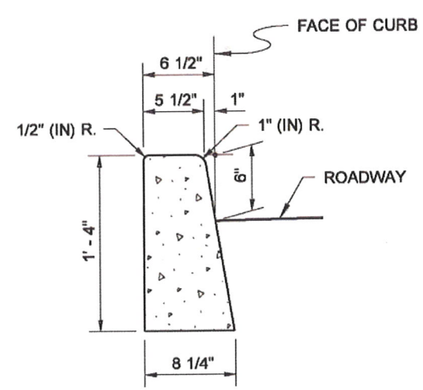

CEMENT CONCRETE TRAFFIC CURB

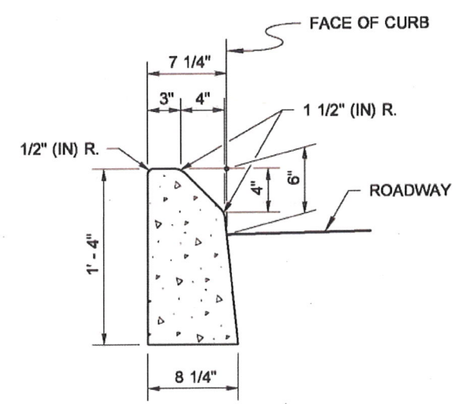

MOUNTABLE CEMENT CONCRETE TRAFFIC CURB

Barry, Ed
May 6 2014 3:31 PM

CEMENT CONCRETE CURBS

STANDARD PLAN F-10.12-03

SHEET 1 OF 1 SHEET

APPROVED FOR PUBLICATION
Bakotich, Pasco
Jun 11 2014 1:25 PM

STATE DESIGN ENGINEER

Washington State Department of Transportation

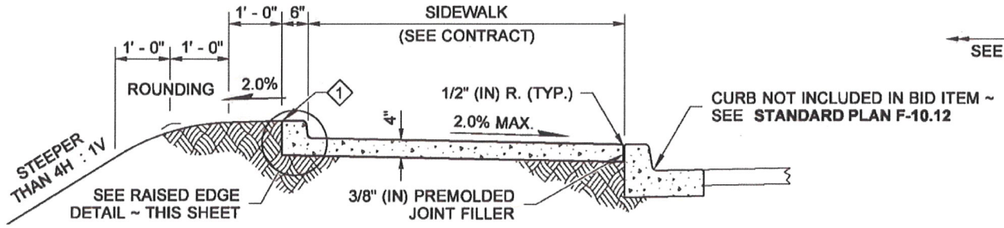

WITH RAISED EDGE

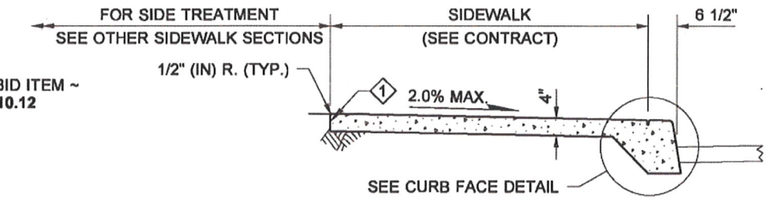

MONOLITHIC CEMENT CONCRETE CURB AND SIDEWALK

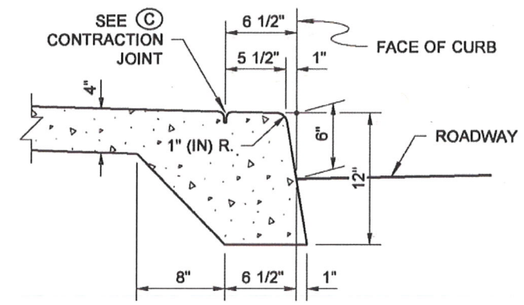

CURB FACE DETAIL

EXTEND SIDEWALK TRANSVERSE EXPANSION JOINTS TO INCLUDE CURB (FULL DEPTH)

1 FINISHED GRADE 1" (IN) BELOW TOP OF CONCRETE SURFACE

NOTE

1. Four feet of the sidewalk width shall be the minimum pedestrian accessible route free of vertical and horizontal obstructions. Gratings, Access Covers, Junction Boxes, Cable Vaults, Pull Boxes and other appurtenances within the sidewalk must have slip resistant surfaces, be flush with surface, and match grade of the sidewalk.

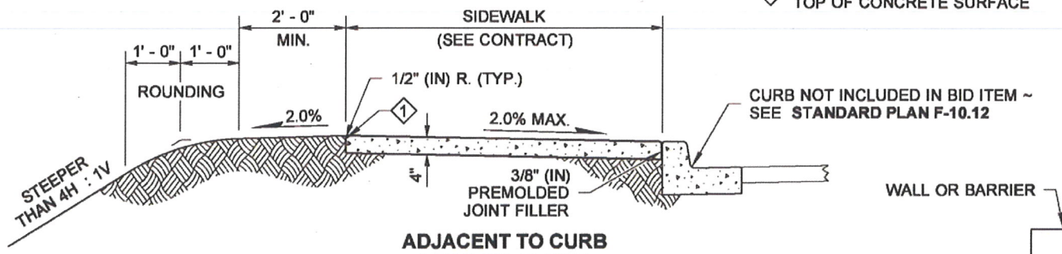

ADJACENT TO CURB
(STEEP FILL SLOPES)

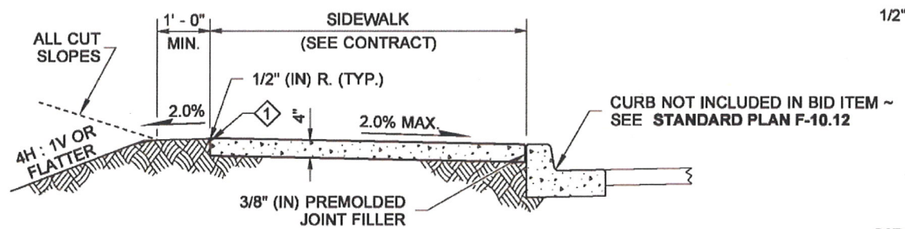

ADJACENT TO CURB

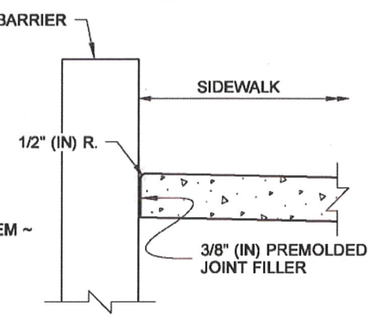

SIDEWALK ADJACENT TO WALL DETAIL

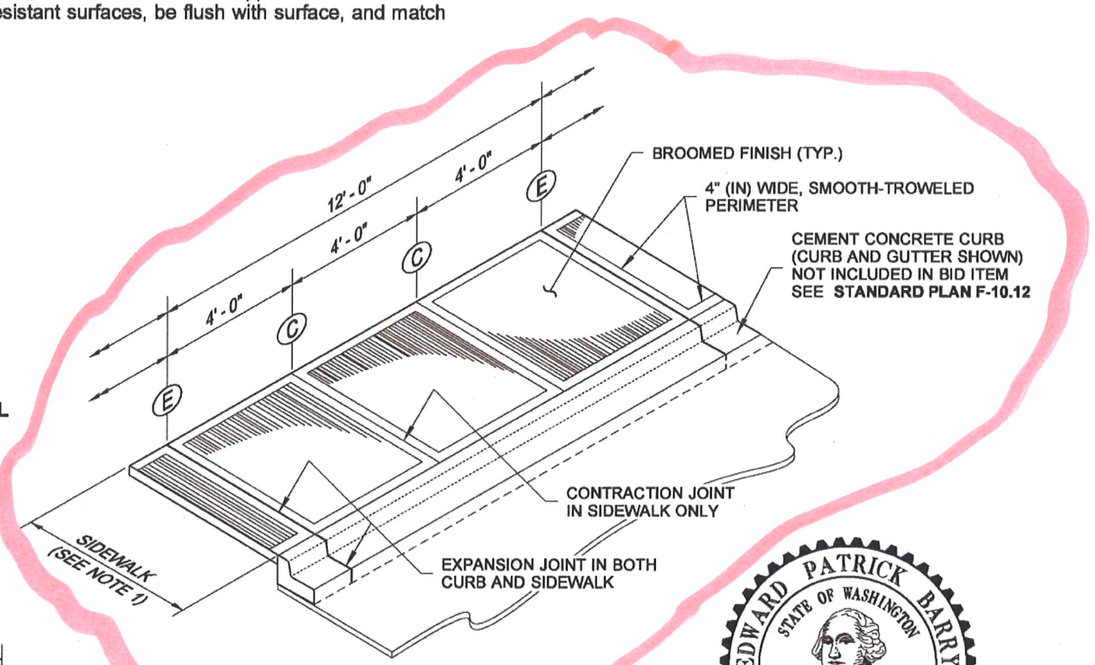

ISOMETRIC VIEW

JOINT AND FINISH DETAIL

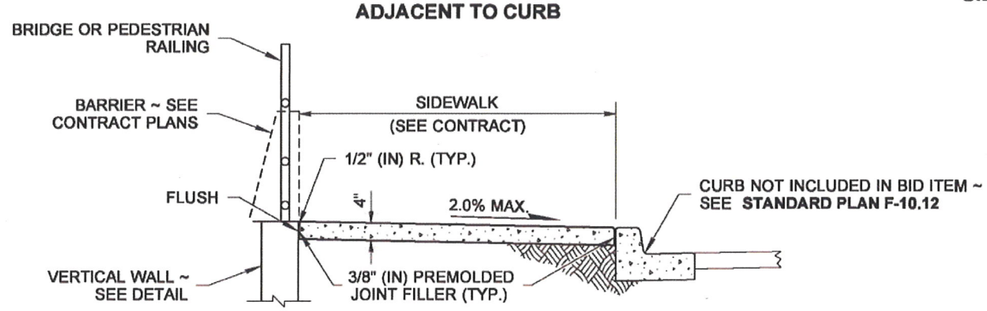

ADJACENT TO CURB AND RAILING OR WALL

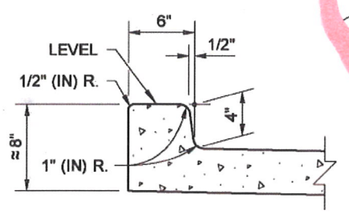

RAISED EDGE DETAIL

EXTEND SIDEWALK TRANSVERSE JOINTS TO INCLUDE RAISED EDGE

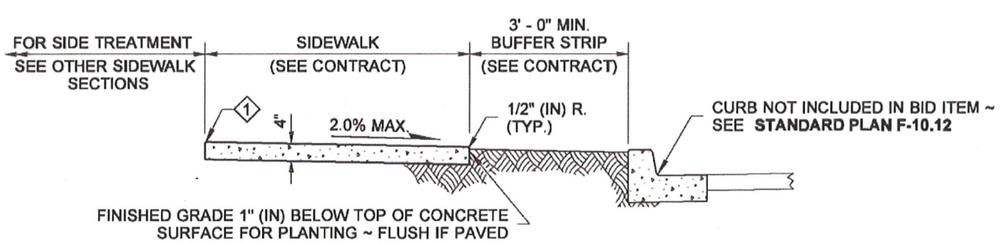

ADJACENT TO BUFFER STRIP

* Expansion joints every 12 ft @ 180 ft (~17 total including @ beginning & end)

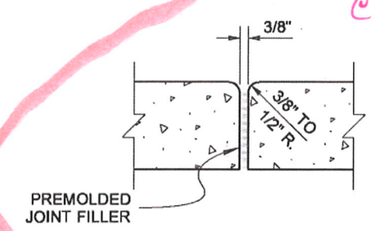

E EXPANSION JOINT

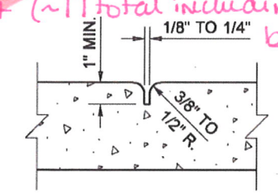

C CONTRACTION JOINT

Barry, Ed
May 6 2014 3:41 PM

CEMENT CONCRETE SIDEWALK

STANDARD PLAN F-30.10-03

SHEET 1 OF 1 SHEET

APPROVED FOR PUBLICATION
Bakotich, Pasco
Jun 11 2014 1:25 PM

STATE DESIGN ENGINEER
Washington State Department of Transportation

DRAWN BY: LISA CYFORD

DRAWN BY: MARK SUJKA

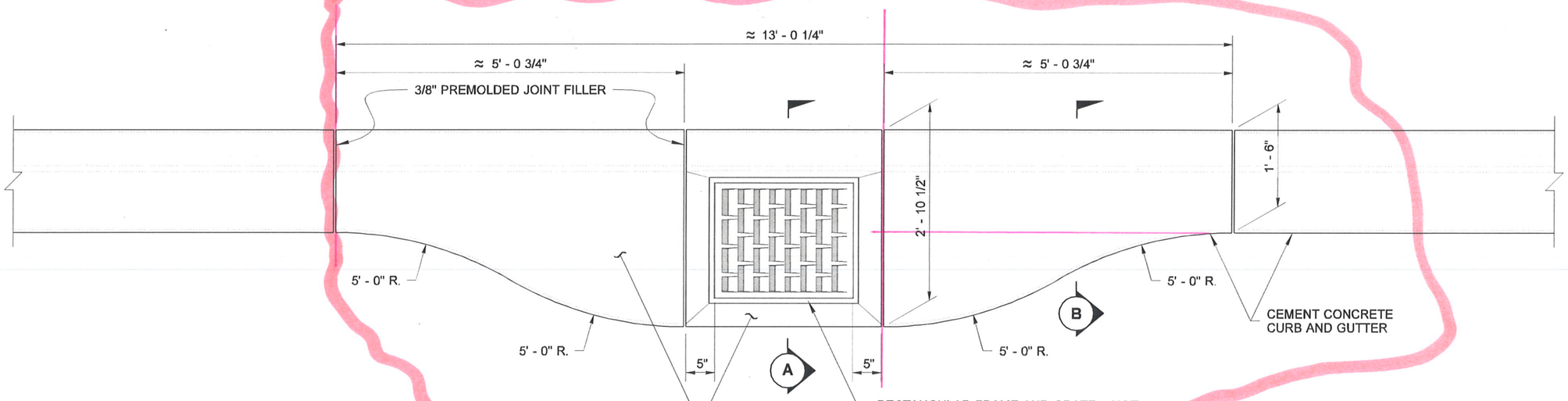

PLAN VIEW

CATCH BASIN GUTTER PAN

*1 CB location included @ northern end.

NOTES

1. The intent of this design is to facilitate the compaction of Hot Mix Asphalt pavement adjacent to a drainage structure.
2. The centerline of the drainage structure may differ from the centerline of the frame and grate.

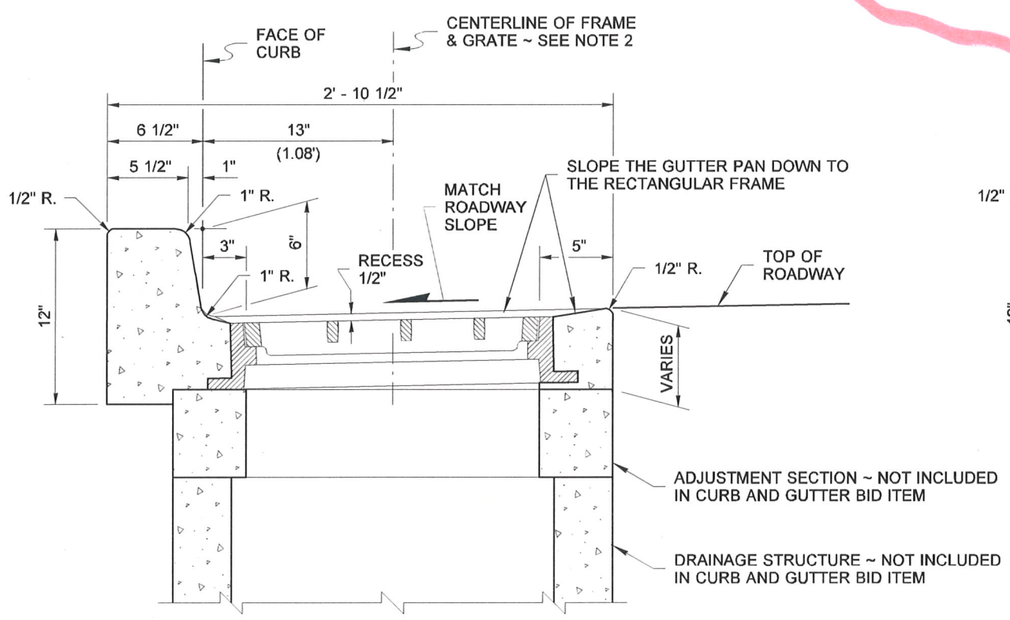

SECTION (A)

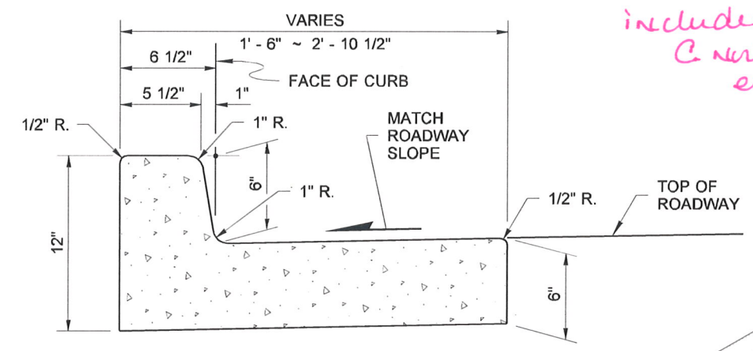

SECTION (B)

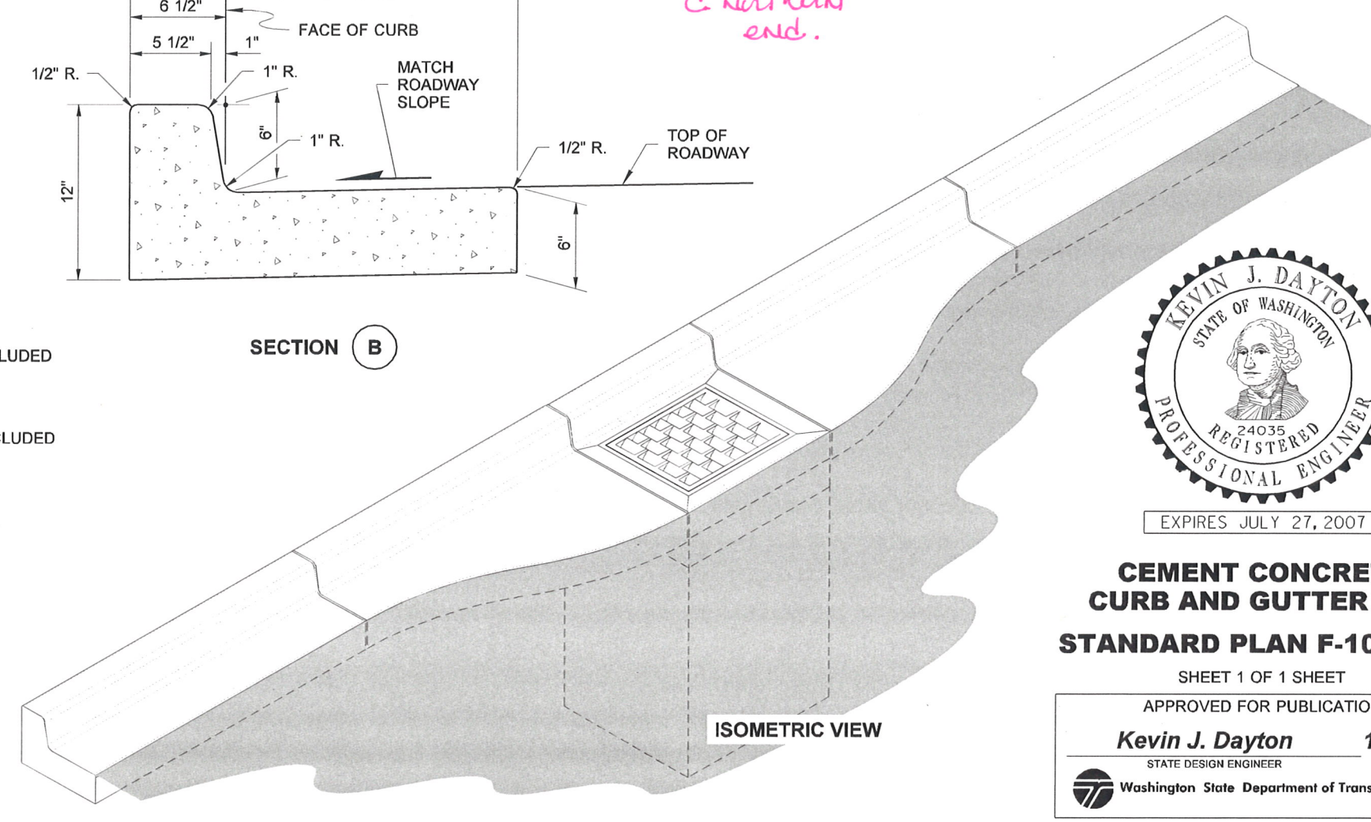

ISOMETRIC VIEW

KEVIN J. DAYTON
STATE OF WASHINGTON
24035
REGISTERED
PROFESSIONAL ENGINEER

EXPIRES JULY 27, 2007

NOTE: THIS PLAN IS NOT A LEGAL ENGINEERING DOCUMENT BUT AN ELECTRONIC DUPLICATE. THE ORIGINAL, SIGNED BY THE ENGINEER AND APPROVED FOR PUBLICATION, IS KEPT ON FILE AT THE WASHINGTON STATE DEPARTMENT OF TRANSPORTATION. A COPY MAY BE OBTAINED UPON REQUEST.

CEMENT CONCRETE CURB AND GUTTER PAN

STANDARD PLAN F-10.16-00

SHEET 1 OF 1 SHEET

APPROVED FOR PUBLICATION

Kevin J. Dayton — STATE DESIGN ENGINEER

12-20-06 — DATE

Washington State Department of Transportation