TOWN OF YARROW POINT

KING COUNTY WASHINGTON

NE 42ND STREET/91ST AVENUE NE STORMWATER & UGC PROJECT

TOWN OFFICIALS

DICKER CAHILL
Mayor

STEPHAN LANGERHOLM **CARL SCANDELLA** **MARY ELMORE**
Town Council

ANDY VALAAS **STEVE BUSH**
Town Council

STACIA SCHROEDER, P.E
TOWN ENGINEER

BONNIE RITTER
CLERK-TREASURER

Gray & Osborne, Inc.
CONSULTING ENGINEERS
3710 168TH STREET NE, BLDG. B, SUITE 210
ARLINGTON, WASHINGTON 98223 (360) 454-5490

AUGUST 2020
G&O JOB #19456

ABBREVIATIONS

AC	ASBESTOS CEMENT PIPE
ADJ	ADJUST
ALT	ALTERNATE
ANSI	AMERICAN NATIONAL STANDARDS INSTITUTE
ASPH	ASPHALT
ASTM	AMERICAN SOCIETY OF TESTING AND MATERIALS
AVE	AVENUE
BLDG	BUILDING
BO	BLOW OFF
BOP	BEGINNING OF PROJECT
C	CONDUIT
CB	CATCH BASIN
CF	CUBIC FEET
CFS	CUBIC FEET PER SECOND
CMP	CORRUGATED METAL PIPE
CO	CLEANOUT
CONC	CONCRETE
CONT	CONTINUED/CONTINUOUS
CPEP	CORRUGATED POLYETHYLENE PIPE
CTR	CENTER
CY	CUBIC YARD
℄	CENTER LINE
DI	DUCTILE IRON
DIA	DIAMETER
DIM	DIMENSION
DWGS	DRAWING(S)
E	EAST
EA	EACH
EL	ELEVATION
ELEC	ELECTRICAL
EOP	END OF PROJECT
EX	EXISTING
FIG	FIGURE
FT	FEET
GA	GAUGE
GALV	GALVANIZED
HDPE	HIGH DENSITY POLYETHYLENE PIPE
ID	INSIDE DIAMETER
IE	INVERT ELEVATION
IN	INCH
INV	INVERT
L	LENGTH
LB	POUND
LF	LINEAR FEET
MAX	MAXIMUM
MFR	MANUFACTURER
MH	MANHOLE
MIN	MINIMUM
MISC	MISCELLANEOUS
N	NORTH
NO	NUMBER
NTS	NOT TO SCALE
OC	ON CENTER
OD	OUTSIDE DIAMETER
PERF	PERFORATED
PP	POWER POLE
PVC	POLYVINYL CHLORIDE
PVMT	PAVEMENT
QTY	QUANTITY
R	RADIUS
R/W	RIGHT-OF-WAY
REINF	REINFORCE
RR	RAILROAD
S	SOUTH
SCH	SCHEDULE
SF	SQUARE FEET
SHT	SHEET
SQ	SQUARE
STA	STATION
STD	STANDARD
TC	TOP OF CURB
TEL	TELEPHONE
TESC	TEMPORARY EROSION AND SEDIMENT CONTROL
TYP	TYPICAL
VERT	VERTICAL
W	WEST
W/	WITH
W/O	WITHOUT
WSDOT	WASHINGTON STATE DEPARTMENT OF TRANSPORTATION

LINETYPES

EXISTING	PROPOSED	DESCRIPTION
SURFACE FEATURES		
		ASPHALT PAVEMENT
		GRAVEL SURFACING
		CONCRETE SURFACING
		CEMENT CONC. SIDEWALK
x x		FENCE/RAILING (TYPE AS NOTED)
		SHRUB/TREE/VEGETATION LINE
		EDGE OF LANDSCAPING
SURVEY		
		RIGHT-OF-WAY LINE
		CENTERLINE OF CONSTRUCTION
		PROPERTY LINE
10		CONTOUR LINE
		SAWCUT LINE (APPROXIMATE LOCATION)
UTILITIES		
OH		OVERHEAD UTILITIES
E	E	BURIED ELECTRICAL (PSE)
T	T	BURIED TELEPHONE (CENTURYLINK)
TV	TV	BURIED CABLE TELEVISION (COMCAST)
	JT	JOINT TRENCH
G		GAS MAIN (SIZE AS NOTED)
W		WATER MAIN (SIZE AS NOTED)
W		AC WATER MAIN (ABANDONED)
IR	IR	IRRIGATION LINE (SIZE AS NOTED)
S		SANITARY SEWER MAIN (SIZE AS NOTED)
D	D	STORM DRAIN (SIZE AS NOTED)

ORDER OF WORK

1. ATTEND PRECONSTRUCTION MEETING
2. PROVIDE MATERIAL SUBMITTALS
3. CONTACT PSE, COMCAST AND CENTURYLINK TO ORDER MATERIAL. (4 WEEK LEAD TIME)
4. CALL FOR UTILITY LOCATES
5. INSTALL TRAFFIC CONTROL AND EROSION CONTROL DEVICES
6. PERFORM POTHOLING OPERATIONS.
7. CONSTRUCT UNDERGROUND FACILITIES
8. PROVIDE 2 WEEK ADVANCE NOTICE TO PSE, COMCAST AND CENTURYLINK.
9. RESTORE PAVED AND CONCRETE SURFACES (STREET AND DRIVEWAYS)
10. PSE, COMCAST AND CENTURYLINK TO PULL CONDUCTORS AND ENERGIZE THEIR FACILITIES. (7 WEEKS) CONTRACTOR SHALL DEDICATE LABOR, MATERIAL AND EQUIPMENT TO ASSIST UTILITY COMPANIES.
11. PROPERTY RESTORATION
12. SUBMIT RECORD DRAWINGS

SHEET INDEX

SHEET #	DESCRIPTION
1	VICINITY & LOCATION MAPS, SYMBOL LEGEND, ABBREVIATIONS AND INDEX
2	GENERAL CONSTRUCTION NOTES
3	TEMPORARY EROSION CONTROL DETAILS
4–6	PLAN AND PROFILE
7	CATCH BASIN REPLACEMENT – 91ST AVENUE NE
8–11	STORM DETAILS
12–17	JOINT UTILITY TRENCH PLAN
18	CONDUIT TABLES
19	JOINT TRENCH DETAILS
20	CONSTRUCTION DETAILS
21	IRRIGATION PLAN AND DETAILS

BURIED UTILITIES IN AREA
CALL BEFORE YOU DIG
1-800-424-5555
EXISTING UTILITIES SHOWN ARE FROM THE BEST AVAILABLE INFORMATION AND NO GUARANTEE IS MADE AS TO THE EXACT SIZE, TYPE, LOCATION OR DEPTH

APPROVAL FOR CONSTRUCTION

BY: TOWN OF YARROW POINT

DATE: _____

APPROVAL EXPIRES: _____

WATER SYMBOLS

EXISTING	PROPOSED	DESCRIPTION
		CAP/PLUG
		COUPLING/ADAPTER
		GUARD POST/BOLLARD
		REDUCER
		THRUST BLOCK
		WATER METER
FIRE HYDRANT		
		FIRE HYDRANT (3-NOZZLE)
VALVES		
		AIR RELIEF VALVE
		BLOW-OFF VALVE
		GATE VALVE

GAS/POWER/TELEPHONE/CABLE SYMBOLS

EXISTING	PROPOSED	DESCRIPTION
		GAS METER
		GAS VALVE
		UTILITY POLE
		UTILITY POLE ANCHOR
	PSE	PSE (P) JUNCTION BOX, VAULT OR HANDHOLD (ACTUAL DIMENSION SHOWN IN PLAN VIEW)
	CL	CENTURYLINK (CL) VAULT OR HANDHOLD (ACTUAL DIMENSION SHOWN IN PLAN VIEW)
	TV	COMCAST (CC) VAULT OR HANDHOLD (ACTUAL DIMENSION SHOWN IN PLAN VIEW)

SURVEY SYMBOLS

EXISTING	PROPOSED	DESCRIPTION
		CONTROL POINT
		MONUMENT (IN CASE)
		MONUMENT (SURFACE)
		BENCH MARK
		BOUNDARY/PROPERTY CORNER

SANITARY/STORM SEWER SYMBOLS

EXISTING	PROPOSED	DESCRIPTION
D	D	STORM DRAIN MANHOLE/TYPE 2 CATCH BASIN (ACTUAL DIMENSION SHOWN FOR PROPOSED)
		STORM DRAIN CATCH BASIN, CONCRETE INLET, OR YARD/AREA DRAIN (ACTUAL DIMENSION SHOWN FOR PROPOSED)
S		SANITARY SEWER MANHOLE (ACTUAL DIMENSION SHOWN FOR PROPOSED)
		CLEAN OUT (SAN. SEWER OR STORM)

SURFACE FEATURES/LANDSCAPING

EXISTING	PROPOSED	DESCRIPTION
		BUILDING
		SIGN
		ROCK WALL
		MODULAR BLOCK WALL
		SHRUB
		TREE (CONIFER)–SIZE AS NOTED
		TREE (DECIDUOUS)–SIZE AS NOTED

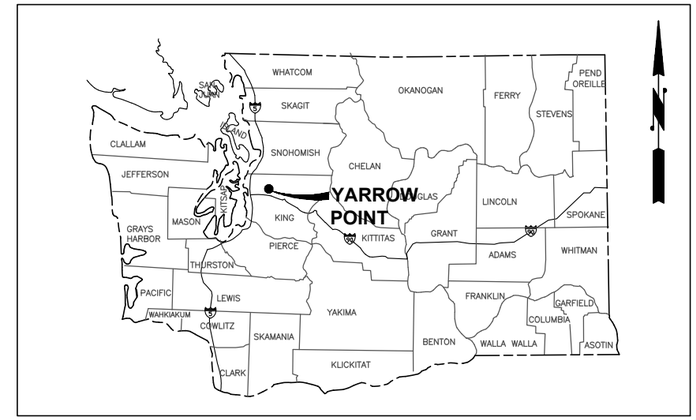

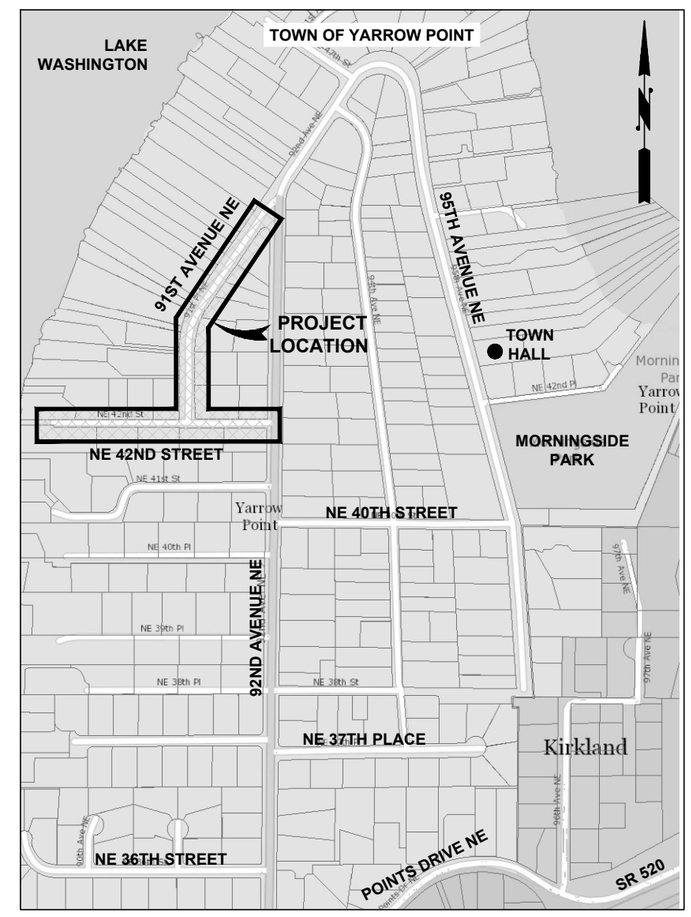

0 1" 2"
TWO INCHES AT FULL SCALE.
IF NOT, SCALE ACCORDINGLY

Gray & Osborne, Inc.
CONSULTING ENGINEERS
3710 168TH STREET NE, BLDG. B, SUITE 210
ARLINGTON, WA 98223 • (360) 454-5490

DATE: AUG 2020
DRAWN: C.J.B.
CHECKED: K.W.B.
APPROVED: R.W.K

No.	REVISION	DATE	APPD

KEVIN W. BROWN — STATE OF WASHINGTON — 45868 — REGISTERED PROFESSIONAL ENGINEER

ROGER W. KUYKENDALL — STATE OF WASHINGTON — 22858 — REGISTERED PROFESSIONAL ENGINEER

TOWN OF YARROW POINT
KING COUNTY WASHINGTON
NE 42ND STREET/91ST AVENUE NE STORMWATER & UGC PROJECT
VICINITY & LOCATION MAPS, SYMBOL LEGEND, ABBREVIATIONS AND INDEX

SHEET: 1
OF: 21

JOB NO.: 19456
DWG: LEGEND

M:\Yarrow Point\19456.00 42nd St - 91st Ave Storm\01 Design\PLANSET\General\LEGEND.dwg, 8/6/2020 6:07 PM, KEVIN BROWN

GENERAL NOTES
TOWN OF YARROW POINT

1. THIS DEVELOPMENT PROJECT SHALL CONFORM TO THE TOWN OF YARROW POINT'S REQUIREMENTS AND BE IN ACCORDANCE WITH THE APPROVED PLANS. ANY CHANGES FROM THE APPROVED PLAN WILL REQUIRE APPROVAL FROM THE OWNER, ENGINEER, BUILDING OFFICIAL, TOWN ENGINEER, AND TOWN PLANNER AS APPLICABLE.

2. ALL WORKMANSHIP AND MATERIALS SHALL CONFORM TO THE "WASHINGTON STATE DEPARTMENT OF TRANSPORTATION (WSDOT) STANDARD SPECIFICATIONS FOR ROAD, BRIDGE, AND MUNICIPAL CONSTRUCTION" (LATEST EDITION), EXCEPT WHERE SUPPLEMENTED OR MODIFIED BY THE TOWN. COPIES OF THE ABOVE DOCUMENTS SHALL BE AVAILABLE AT THE JOB SITE DURING CONSTRUCTION.

3. A PRE-CONSTRUCTION MEETING IS REQUIRED PRIOR TO THE START OF ALL CONSTRUCTION. CONTACT THE TOWN ENGINEER OR THE TOWN BUILDING OFFICIAL TO SCHEDULE A MEETING.

4. LOCATIONS SHOWN FOR EXISTING UTILITIES ARE APPROXIMATE. THE CONTRACTOR IS CAUTIONED THAT OVERHEAD UTILITY LINES MAY NOT BE SHOWN ON THE DRAWINGS. IT SHALL BE THE CONTRACTOR'S RESPONSIBILITY TO DETERMINE THE TRUE ELEVATIONS AND LOCATIONS OF ALL UNDERGROUND UTILITIES AND THE EXTENT OF ANY HAZARDS CREATED BY OVERHEAD UTILITY LINES. IDENTIFICATION, LOCATION MARKING, AND RESPONSIBILITY FOR UNDERGROUND FACILITIES OR UTILITIES IS GOVERNED BY PROVISION OF CHAPTER 19.122 REVISED CODE OF WASHINGTON (RCW). PRIOR TO STARTING CONSTRUCTION, THE CONTRACTOR SHALL CALL ONECALL (1-800-424-5555) FOR UTILITY LOCATIONS (WATER, SANITARY SEWER, STORM SEWER, GAS, POWER, TELEPHONE, CABLE TELEVISION, AND INTERNET.

5. AS-BUILT DRAWINGS ARE REQUIRED PRIOR TO PROJECT ACCEPTANCE.

6. PER TOWN OF YARROW POINT MUNICIPAL CODE SECTION 10.12, CONTRACTOR'S VEHICLES, INCLUDING TRUCK AND TRAILER COMBINATIONS, SHALL NOT HAVE AN OVERALL LENGTH IN EXCESS OF 40 FEET.

7. ALL STAGING AREAS USED BY THE CONTRACTOR TO STORE EQUIPMENT AND MATERIAL SHALL BE RESTORED TO PRE-CONSTRUCTION CONDITIONS AT NO ADDITIONAL COST TO THE TOWN.

STORM DRAINAGE NOTES
TOWN OF YARROW POINT
(MODIFIED)

2. BEFORE ANY CONSTRUCTION MAY OCCUR, THE CONTRACTOR SHALL HAVE PLANS WHICH HAVE BEEN SIGNED AND APPROVED BY THE TOWN OF YARROW POINT.

3. ALL STORM DRAINAGE IMPROVEMENTS SHALL BE DESIGNED AND CONSTRUCTED IN ACCORDANCE WITH THE LATEST EDITION OF THE TOWN OF YARROW POINT STANDARD PLANS AND NOTES, AND THE STANDARD SPECIFICATIONS FOR ROAD, BRIDGE AND MUNICIPAL CONSTRUCTION, PREPARED BY WSDOT AND THE AMERICAN PUBLIC WORKS ASSOCIATION (APWA).

4. ANY DEVIATION FROM THE APPROVED PLANS WILL REQUIRE WRITTEN APPROVAL. ALL CHANGES SHALL BE SUBMITTED TO THE TOWN.

5. A COPY OF THE APPROVED STORM WATER PLANS MUST BE ON THE JOB SITE WHENEVER CONSTRUCTION IS IN PROGRESS.

6. ALL DISTURBED AREAS SHALL BE SEEDED AND MULCHED OR SIMILARLY STABILIZED TO THE SATISFACTION OF THE TOWN OF YARROW POINT FOR THE PREVENTION OF ON-SITE EROSION AFTER THE COMPLETION OF CONSTRUCTION.

9. ALL CATCH BASINS SHALL BE TYPE I UNLESS OTHERWISE NOTED. CATCH BASINS WITH A DEPTH OF OVER FIVE FEET (5') TO THE PIPE INVERT SHALL BE A TYPE II CATCH BASIN. TYPE II CATCH BASINS EXCEEDING FIVE FEET (5') IN DEPTH SHALL HAVE A STANDARD LADDER INSTALLED.

13. CONSTRUCTION OF DEWATERING (GROUNDWATER) SYSTEMS SHALL BE IN ACCORDANCE WITH THE APWA STANDARD SPECIFICATIONS.

15. ALL TRENCH BACKFILL SHALL BE COMPACTED TO 95 PERCENT DENSITY IN ROADWAYS, ROADWAY SHOULDERS, ROADWAY PRISM AND DRIVEWAYS, AND 85 PERCENT DENSITY IN UNPAVED AREAS. ALL PIPE ZONE COMPACTION SHALL BE 95 PERCENT.

16. THE CONTRACTOR SHALL BE RESPONSIBLE FOR PROVIDING ADEQUATE SAFEGUARDS, SAFETY DEVICES, PROTECTIVE EQUIPMENT, CONFINED SPACE PROTECTION, FLAGGERS, AND ANY OTHER NEEDED ACTIONS TO PROTECT THE LIFE, HEALTH, AND SAFETY OF THE PUBLIC, AND TO PROTECT PROPERTY IN CONNECTION WITH THE PERFORMANCE OF WORK COVERED BY THE CONTRACT. ANY WORK WITHIN THE TRAVELED RIGHT-OF-WAY THAT MAY INTERRUPT NORMAL TRAFFIC FLOW SHALL REQUIRE A TRAFFIC CONTROL PLAN APPROVED BY THE TOWN OF YARROW POINT. ALL SECTIONS OF THE WSDOT STANDARD SPECIFICATIONS, TRAFFIC CONTROL SECTION, AND THE MANUAL OF UNIFORM TRAFFIC CONTROL DEVICES (MUTCD) SHALL APPLY.

18. ALL MANHOLE LADDERS SHALL BE FIRMLY ATTACHED AND EXTEND TO WITHIN 1'OF THE BOTTOM OF THE STRUCTURE.

19. APPROXIMATE LOCATIONS OF EXISTING UTILITIES HAVE BEEN OBTAINED FROM AVAILABLE RECORDS AND ARE SHOWN FOR CONVENIENCE. THE CONTRACTOR SHALL BE RESPONSIBLE FOR VERIFICATION OF EXISTING UTILITY LOCATIONS WHETHER OR NOT THESE UTILITIES ARE SHOWN ON THE PLANS. THE CONTRACTOR SHALL EXERCISE ALL CARE TO AVOID DAMAGE TO ANY UTILITY. IF CONFLICTS WITH EXISTING UTILITIES ARISE DURING CONSTRUCTION, THE CONTRACTOR SHALL NOTIFY THE TOWN ENGINEER OR THE TOWN BUILDING OFFICIAL IMMEDIATELY AND ANY CHANGES REQUIRED SHALL BE APPROVED BY THE APPROPRIATE TOWN STAFF PRIOR TO COMMENCEMENT OF RELATED CONSTRUCTION ON THE PROJECT.

22. ALL INLET, MANHOLE, AND CATCH BASIN FRAMES AND GRATES SHALL NOT BE ADJUSTED TO GRADE UNTIL IMMEDIATELY PRIOR TO FINAL PAVING. ALL CATCH BASIN GRATES SHALL BE SET 0.10' BELOW PAVEMENT LEVEL.

24. ALL DAMAGES INCURRED TO PUBLIC AND/OR PRIVATE PROPERTY BY THE CONTRACTOR DURING THE COURSE OF CONSTRUCTION SHALL BE PROMPTLY REPAIRED TO THE SATISFACTION OF THE TOWN ENGINEER AND/OR TOWN BUILDING OFFICIAL BEFORE PROJECT APPROVAL AND THE RELEASE ANY BONDS.

25. GROUT ALL SEAMS AND OPENINGS IN ALL INLETS, CATCH BASINS, AND MANHOLES.

TEMPORARY EROSION/SEDIMENTATION NOTES
TOWN OF YARROW POINT
(MODIFIED)

1. THE APPROVED CONSTRUCTION SEQUENCE SHALL BE AS FOLLOWS:
   a. CONDUCT PRE-CONSTRUCTION MEETING.
   b. FLAG OR FENCE CLEARING LIMITS.
   ~~c. POST SIGN WITH NAME AND PHONE NUMBER OF TESC SUPERVISOR.~~
   d. INSTALL CATCH BASIN PROTECTION IF REQUIRED.
   ~~e. GRADE AND INSTALL CONSTRUCTION ENTRANCE(S).~~
   f. INSTALL PERIMETER PROTECTION (SILT FENCE, BRUSH BARRIER, ETC.).
   ~~g. CONSTRUCT SEDIMENT PONDS AND TRAPS.~~
   ~~h. GRADE AND STABILIZE CONSTRUCTION ROADS.~~
   ~~i. CONSTRUCT SURFACE WATER CONTROLS (INTERCEPTOR DIKES, PIPE SLOPE DRAINS, ETC.) SIMULTANEOUSLY WITH CLEARING AND GRADING FOR PROJECT DEVELOPMENT.~~
   j. MAINTAIN EROSION CONTROL MEASURES IN ACCORDANCE WITH TOWN OF YARROW POINT STANDARDS AND MANUFACTURER'S RECOMMENDATIONS.
   k. RELOCATE EROSION CONTROL MEASURES OR INSTALL NEW MEASURES SO THAT AS SITE CONDITIONS CHANGE, THE EROSION AND SEDIMENT CONTROL IS ALWAYS IN ACCORDANCE WITH THE TOWN TESC MINIMUM REQUIREMENTS.
   l. COVER ALL AREAS WITHIN THE SPECIFIED TIME FRAME WITH STRAW, WOOD FIBER MULCH, COMPOST, PLASTIC SHEETING, CRUSHED ROCK OR EQUIVALENT.
   ~~m. STABILIZE ALL AREAS THAT REACH FINAL GRADE WITHIN 7 DAYS.~~
   ~~n. SEED OR SOD ANY AREAS TO REMAIN UNWORKED FOR MORE THAN 30 DAYS.~~
   o. UPON COMPLETION OF THE PROJECT, ALL DISTURBED AREAS MUST BE STABILIZED AND BEST MANAGEMENT PRACTICES REMOVED IF APPROPRIATE.

3. THE IMPLEMENTATION OF THIS ESC PLAN AND THE CONSTRUCTION, MAINTENANCE, REPLACEMENT, AND UPGRADING OF THESE ESC FACILITIES IS THE RESPONSIBILITY OF THE PERMITTEE/CONTRACTOR UNTIL ALL CONSTRUCTION IS APPROVED.

5. THE ESC FACILITIES SHOWN ON THIS PLAN MUST BE CONSTRUCTED PRIOR TO OR IN CONJUNCTION WITH ALL CLEARING AND GRADING ACTIVITIES IN SUCH A MANNER AS TO ENSURE THAT SEDIMENT-LADEN WATER DOES NOT ENTER THE DRAINAGE SYSTEM OR VIOLATE APPLICABLE WATER STANDARDS. WHEREVER POSSIBLE, MAINTAIN NATURAL VEGETATION FOR SILT CONTROL.

6. THE ESC FACILITIES SHOWN ON THIS PLAN ARE THE MINIMUM REQUIREMENTS FOR ANTICIPATED SITE CONDITIONS. DURING THE CONSTRUCTION PERIOD, THESE ESC FACILITIES SHALL BE UPGRADED (E.G. ADDITIONAL SUMPS, RELOCATION OF DITCHES AND SILT FENCES, ETC.) AS NEEDED FOR UNEXPECTED STORM EVENTS. ADDITIONALLY, MORE ESC FACILITIES MAY BE REQUIRED TO ENSURE COMPLETE SILTATION CONTROL. THEREFORE, DURING THE COURSE OF CONSTRUCTION IT SHALL BE THE OBLIGATION AND RESPONSIBILITY OF THE CONTRACTOR TO ADDRESS ANY NEW CONDITIONS THAT MAY BE CREATED BY HIS ACTIVITIES AND TO PROVIDE ADDITIONAL FACILITIES OVER AND ABOVE THE MINIMUM REQUIREMENTS AS MAY BE NEEDED.

7. THE ESC FACILITIES SHALL BE INSPECTED BY THE PERMITTEE/CONTRACTOR DAILY DURING NON-RAINFALL PERIODS, EVERY HOUR (DAYLIGHT) DURING RAINFALL EVENTS, AT THE END OF EVERY RAINFALL, AND MAINTAINED AS NECESSARY TO ENSURE THEIR CONTINUED FUNCTIONING. IN ADDITION, TEMPORARY SILTATION PONDS AND ALL TEMPORARY SILTATION CONTROLS SHALL BE MAINTAINED IN A SATISFACTORY CONDITION UNTIL SUCH TIME THAT CLEARING AND/OR CONSTRUCTION IS COMPLETED, PERMANENT DRAINAGE FACILITIES ARE OPERATIONAL, AND THE POTENTIAL FOR EROSION HAS PASSED. WRITTEN RECORDS SHALL BE KEPT DOCUMENTING THE REVIEWS OF THE ESC FACILITIES.

9. ALL DENUDED SOILS MUST BE STABILIZE WITH AN APPROVED TESC METHOD (E.G. SEEDING, MULCHING, PLASTIC COVERING, CRUSHED ROCK) WITHIN THE FOLLOWING TIMELINES:
   a. MAY 1 TO SEPTEMBER 30 – SOILS MUST BE STABILIZED WITHIN 7 DAYS OF GRADING.
   b. OCTOBER 1 TO APRIL 30 – SOILS MUST BE STABILIZED WITHIN 2 DAYS OF GRADING
   c. STABILIZE SOILS AT THE END OF THE WORKDAY PRIOR TO A WEEKEND, HOLIDAY, OR PREDICTED RAIN EVENT.

10. AT NO TIME SHALL MORE THAN 1' OF SEDIMENT BE ALLOWED TO ACCUMULATE WITHIN A CATCH BASIN. ALL CATCH BASINS AND CONVEYANCE LINES SHALL BE CLEANED PRIOR TO PAVING. THE CLEANING OPERATION SHALL NOT FLUSH SEDIMENT-LADEN WATER INTO THE DOWNSTREAM SYSTEM.

16. ALL WORK AND MATERIALS SHALL BE IN ACCORDANCE WITH THE TOWN OF YARROW POINT STANDARDS AND SPECIFICATIONS.

17. THE ESC FACILITIES SHALL BE CONSTRUCTED IN ACCORDANCE WITH THE DETAILS ON THE APPROVED PLANS. LOCATIONS MAY BE MOVED TO SUIT FIELD CONDITIONS, SUBJECT TO APPROVAL BY THE TOWN ENGINEER OR THE TOWN BUILDING OFFICIAL.

21. OFF-SITE STREETS MUST BE KEPT CLEAN AT ALL TIMES. IF DIRT IS DEPOSITED ON THE PUBLIC STREET SYSTEM THE STREET SHALL BE IMMEDIATELY CLEANED WITH POWER SWEEPER OR OTHER EQUIPMENT.

22. ANY CATCH BASINS COLLECTING RUNOFF FROM THE SITE, WHETHER THEY ARE ON OR OFF THE SITE, SHALL HAVE THEIR GRATES COVERED WITH FILTER FABRIC DURING CONSTRUCTION. CATCH BASINS DIRECTLY DOWNSTREAM OF THE CONSTRUCTION ENTRANCE OR ANY OTHER CATCH BASIN AS DETERMINED BY THE TOWN ENGINEER OR TOWN BUILDING OFFICIAL SHALL BE PROTECTED WITH A "FILTER FABRIC SOCK" OR EQUIVALENT.

26. ALL PROPERTIES ADJACENT TO THE PROJECT SITE SHALL BE PROTECTED FROM SEDIMENT DEPOSITION AND RUNOFF.

27. DO NOT FLUSH CONCRETE BY-PRODUCTS OR TRUCKS NEAR OR INTO THE STORM DRAINAGE SYSTEM. IF EXPOSED AGGREGATE IS FLUSHED INTO THE STORM SYSTEM, IT COULD MEAN RE-CLEANING THE ENTIRE DOWNSTREAM STORM SYSTEM, OR POSSIBLY RE-LAYING THE STORM LINE.

28. PRIOR TO OCTOBER 1 OF EACH YEAR (THE BEGINNING OF THE WET SEASON), ALL DISTURBED AREAS SHALL BE REVIEWED TO IDENTIFY WHICH ONES CAN BE SEEDED IN PREPARATION FOR THE WINTER RAINS. THE IDENTIFIED DISTURBED AREA SHALL BE SEEDED WITHIN ONE WEEK AFTER OCTOBER 1. A SITE PLAN DEPICTING THE AREAS TO BE SEEDED AND THE AREAS TO REMAIN UNCOVERED SHALL BE SUBMITTED TO THE TOWN ENGINEER. THE TOWN ENGINEER CAN REQUIRE SEEDING OF ADDITIONAL AREAS IN ORDER TO PROTECT SURFACE WATERS, ADJACENT PROPERTIES, OR DRAINAGE FACILITIES.

BURIED UTILITIES IN AREA
CALL BEFORE YOU DIG
1-800-424-5555
EXISTING UTILITIES SHOWN ARE FROM THE BEST AVAILABLE INFORMATION AND NO GUARANTEE IS MADE AS TO THE EXACT SIZE, TYPE, LOCATION OR DEPTH

APPROVAL FOR CONSTRUCTION

BY: TOWN OF YARROW POINT

DATE: _____

APPROVAL EXPIRES: _____

0 1" 2"
TWO INCHES AT FULL SCALE.
IF NOT, SCALE ACCORDINGLY

Gray & Osborne, Inc.
CONSULTING ENGINEERS
3710 168TH STREET NE, BLDG. B, SUITE 210
ARLINGTON, WA 98223 • (360) 454-5490

DATE: AUG 2020
DRAWN: C.J.B.
CHECKED: K.W.B.
APPROVED: R.W.K

No.	REVISION	DATE	APPD

KEVIN W. BROWN — STATE OF WASHINGTON — 39189 — REGISTERED PROFESSIONAL ENGINEER

ROGER W. KUYKENDALL — STATE OF WASHINGTON — 35588 — REGISTERED PROFESSIONAL ENGINEER

TOWN OF YARROW POINT
WASHINGTON
KING COUNTY
NE 42ND STREET/91ST AVENUE NE
STORMWATER & UGC PROJECT
GENERAL CONSTRUCTION NOTES

SHEET: 2
OF: 21

JOB NO.: 19456
DWG: GENERAL NOTES

M:\Yarrow Point\19456.00 42nd St – 91st Ave Storm\01 Design\PLANSET\General\GENERAL NOTES.dwg, 8/6/2020 6:08 PM, KEVIN BROWN

DRAWN BY: FERN LIDDELL

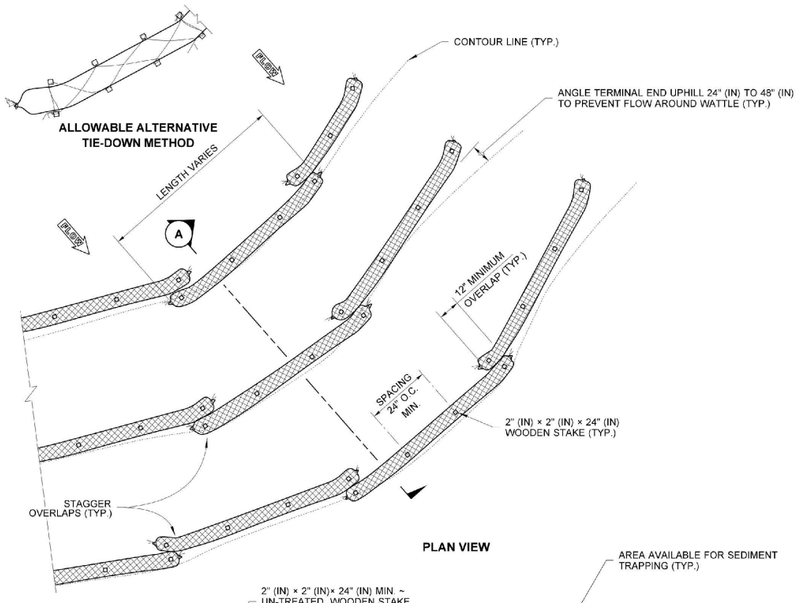

PLAN VIEW

NOTES

1. Wattles shall be in accordance with **Standard Specification, Section 9-14.5(5).** Install Wattles along contours. Installation shall be in accordance with **Standard Specification, Section 8-01.3(10)**.
2. Securely knot each end of Wattle. Overlap adjacent Wattle ends 12" (in) behind one another and securely tie together.
3. Compact excavated soil and trenches to prevent undercutting. Additional staking may be necessary to prevent undercutting.
4. Install Wattle perpendicular to flow along contours.
5. Wattles shall be inspected regularly, and immediately after a rainfall produces runoff, to ensure they remain thoroughly entrenched and in contact with the soil.
6. Perform maintenance in accordance with **Standard Specification, Section 8-01.3(15).**
7. Refer to **Standard Specification, Section 8-01.3(16)** for removal.

WATTLE SPACING TABLE

TEMPORARY		PERMANENT	
8" - 10" OR 10" - 12" DIAM.		10" - 12" DIAM.	
SLOPE	MAX. SPACING	SLOPE	MAX. SPACING
1H : 1V	5' - 0"	-	-
2H : 1V	10' - 0"	2H : 1V	5' - 0"
3H : 1V	15' - 0"	3H : 1V	10' - 0"
4H : 1V	20' - 0"	4H : 1V	15' - 0"

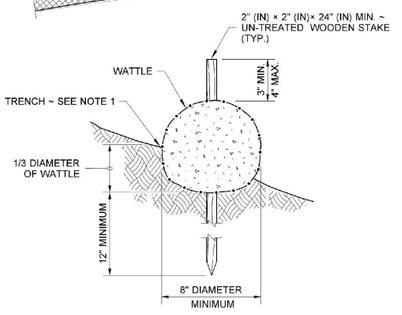

WATTLE DETAIL

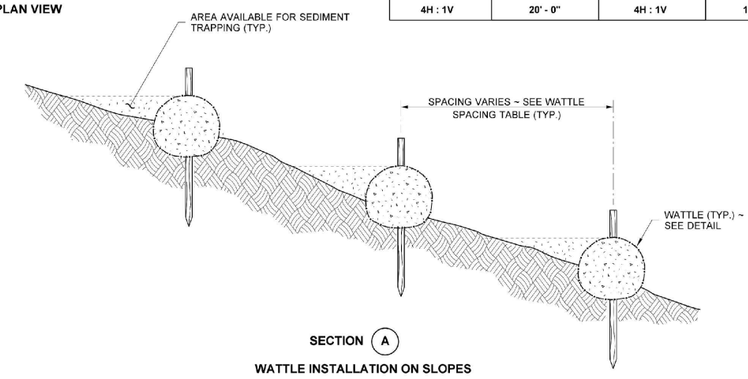

SECTION A

WATTLE INSTALLATION ON SLOPES

STATE OF WASHINGTON
JULI DEE HARTWIG
NO. 1422 EXP. 06/21/2021
LANDSCAPE ARCHITECT

Hartwig, Juli
Jun 4 2019 8:05 AM

WATTLE INSTALLATION ON SLOPE

STANDARD PLAN I-30.30-02

SHEET 1 OF 1 SHEET

APPROVED FOR PUBLICATION
Roark, Steve
Jun 12 2019 7:41 AM
STATE DESIGN ENGINEER
Washington State Department of Transportation

DRAWN BY: LISA CYFORD

NOTES

1. Size the Below Inlet Grate Device (BIGD) for the storm water structure it will service.
2. The BIGD shall have a built-in high-flow relief system (overflow bypass).
3. The retrieval system must allow removal of the BIGD without spilling the collected material.
4. Perform maintenance in accordance with Standard Specification 8-01.3(15).

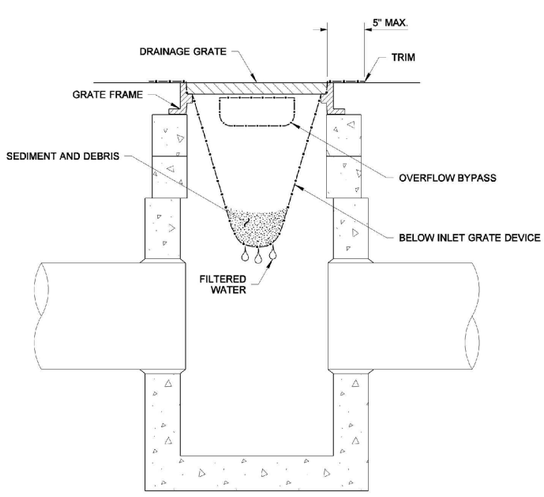

SECTION VIEW
NOT TO SCALE

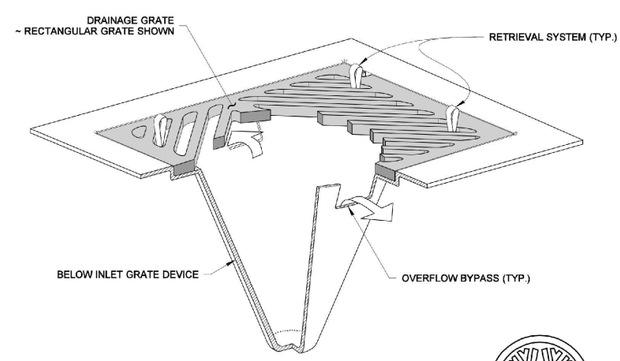

ISOMETRIC VIEW

STATE OF
WASHINGTON
REGISTERED
LANDSCAPE ARCHITECT
MARK W. MAURER
CERTIFICATE NO. 000598

NOTE: THIS PLAN IS NOT A LEGAL ENGINEERING DOCUMENT BUT AN ELECTRONIC DUPLICATE. THE ORIGINAL, SIGNED BY THE ENGINEER AND APPROVED FOR PUBLICATION, IS KEPT ON FILE AT THE WASHINGTON STATE DEPARTMENT OF TRANSPORTATION. A COPY MAY BE OBTAINED UPON REQUEST.

STORM DRAIN INLET PROTECTION

STANDARD PLAN I-40.20-00

SHEET 1 OF 1 SHEET

APPROVED FOR PUBLICATION
Pasco Bakotich III *09-20-07*
STATE DESIGN ENGINEER DATE
Washington State Department of Transportation

APPROVAL FOR CONSTRUCTION

BY: TOWN OF YARROW POINT

DATE:

APPROVAL EXPIRES:

BURIED UTILITIES IN AREA
CALL BEFORE YOU DIG
1-800-424-5555
EXISTING UTILITIES SHOWN ARE FROM THE BEST AVAILABLE INFORMATION AND NO GUARANTEE IS MADE AS TO THE EXACT SIZE, TYPE, LOCATION OR DEPTH

0 1" 2"
TWO INCHES AT FULL SCALE.
IF NOT, SCALE ACCORDINGLY

SHEET: 3
OF: 21
JOB NO.: 19456
DWG: DETAILS

TOWN OF YARROW POINT
KING COUNTY WASHINGTON
NE 42ND STREET/91ST AVENUE NE STORMWATER & UGC PROJECT
TEMPORARY EROSION CONTROL DETAILS

ROGER W. KUYKENDALL — STATE OF WASHINGTON — 35188 — REGISTERED PROFESSIONAL ENGINEER
KEVIN W. BROWN — STATE OF WASHINGTON — 39319 — REGISTERED PROFESSIONAL ENGINEER

No.	REVISION	DATE	APPD

DATE: AUG 2020
DRAWN: C.J.B.
CHECKED: K.W.B.
APPROVED: R.W.K

Gray & Osborne, Inc.
CONSULTING ENGINEERS
3710 168TH STREET NE, BLDG. B, SUITE 210
ARLINGTON, WA 98223 • (360) 454-5490

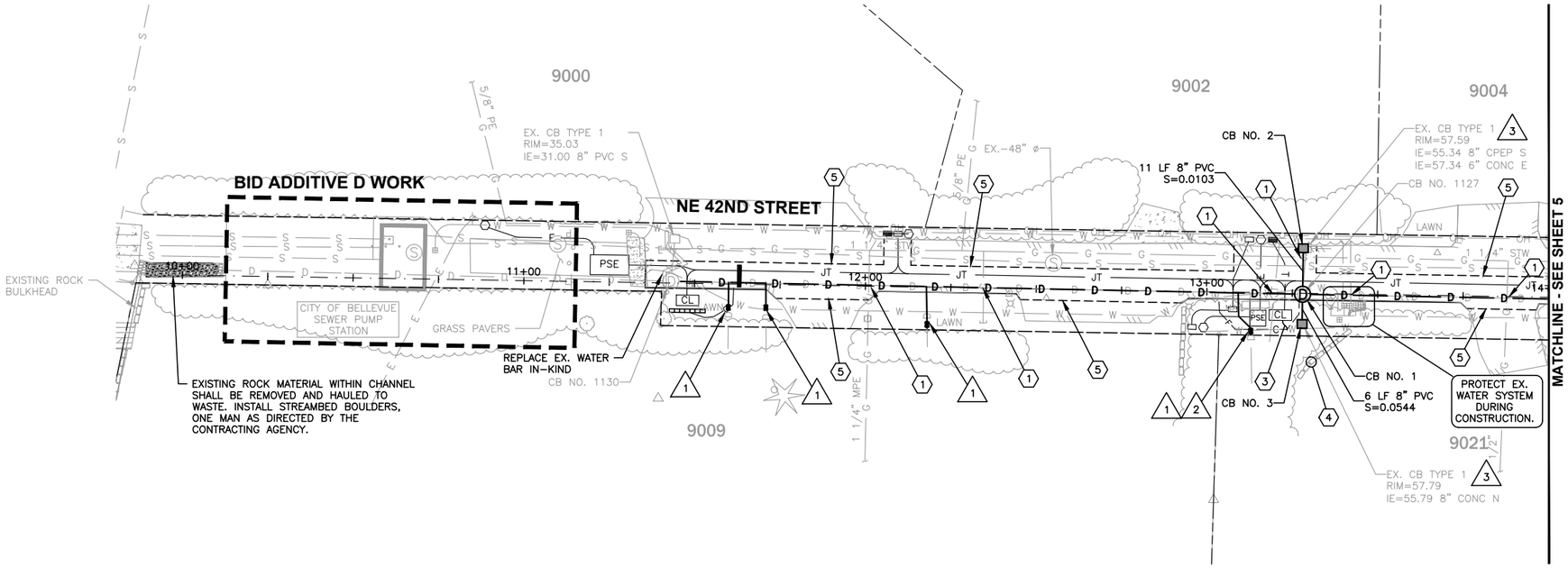

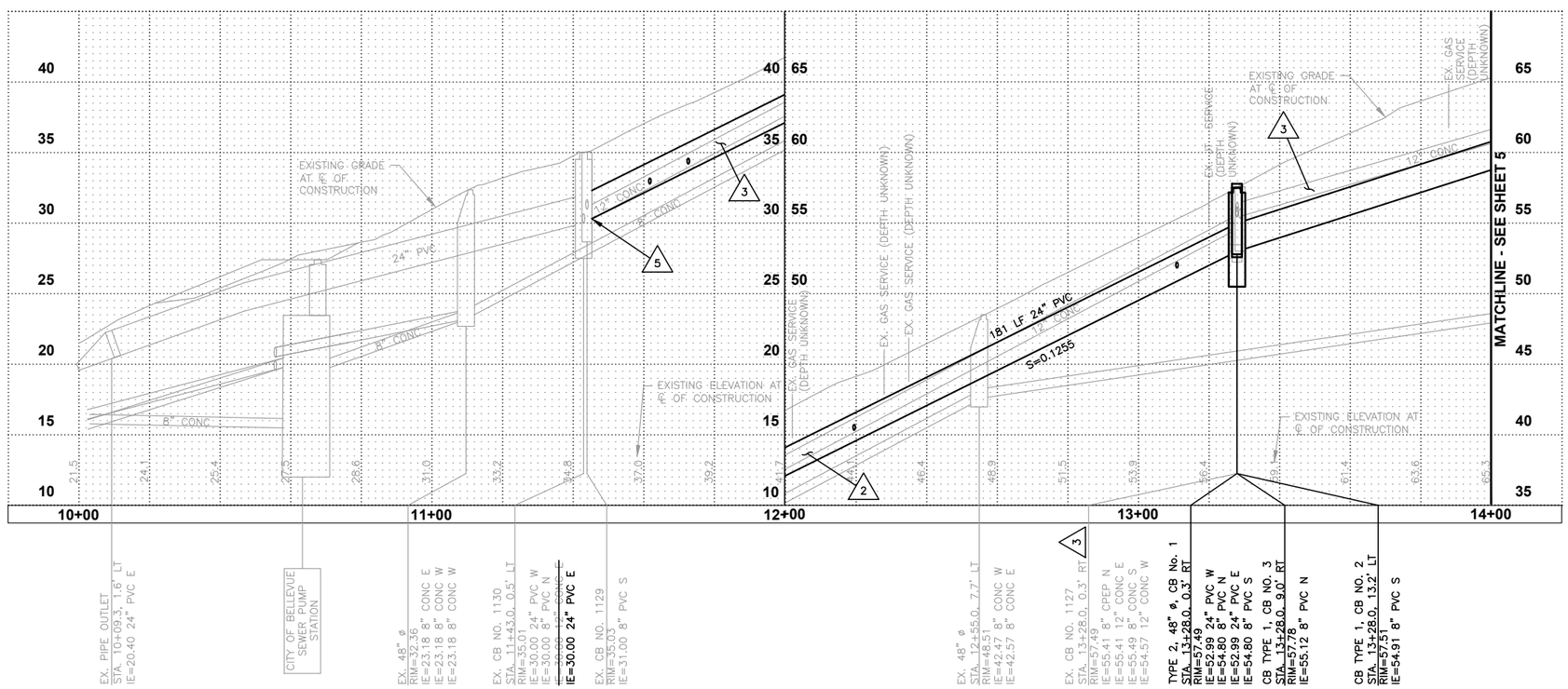

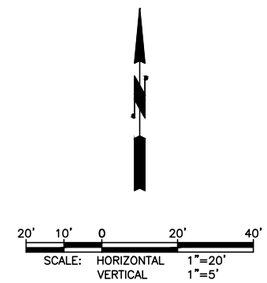

CONSTRUCTION NOTES

1. CAUTION: POTENTIAL UTILITY CONFLICT. VERIFY (POTHOLE) EXACT LOCATION AND DEPTH OF EXISTING UTILITY. SEE ORDER OF WORK.
2. EXISTING UTILITY TO BE REMOVED/RELOCATED BY OTHERS. UTILITY COMPANY SHALL BE NOTIFIED FIVE (5) DAYS PRIOR TO THE DAY THE UTILITY NEEDS TO RELOCATED OR REMOVED. COORDINATE WORK WITH UTILITY COMPANIES.
3. CLEAR AND GRUB EXISTING BRUSH, SHRUBS, TURF, AND/OR VEGETATION AS NEEDED TO INSTALL/REPLACE CATCH BASIN.
4. PROTECT EXISTING DRIVEWAY, FENCE, WALL, TREE, LANDSCAPING, AND/OR PRIVATE IRRIGATION SYSTEM DURING CONSTRUCTION.
5. SAWCUT EXISTING PAVEMENT AND SEAL JOINT (WHERE APPLICABLE) THEN APPLY SAND BLANKET TO THE SURFACE JOINT.
6. ABANDONED EXISTING AC WATER MAIN. CONTRACTOR MAY REMOVE EX. AC WATER MAIN AS NEEDED TO INSTALL FACILITIES. EX. AC WATER MAIN SHALL THEN BE PLUGGED (BOTH SIDES).
7. REMOVE, PROTECT AND REINSATLL EXISTING MAILBOX PAGODA ON NEW CONCRETE PIER BLOCKS. REMOVE AND WASTEHAUL EXISTING CONCRETE PAD.

STORM NOTES

1. RECONNECT EXISTING STORM LATERAL PER DETAIL SHEET 8.
2. REALIGN EXISTING STORM LATERAL TO AVOID NEW IMPROVEMENTS.
3. REMOVE AND WASTEHAUL EXISTING STORM DRAINAGE STRUCTURE(S)/PIPE.
4. ABANDON EXISTING STORM STRUCTURE(S)/PIPE PER THE SPECIFICATIONS.
5. CONNECT NEW STORM PIPE TO EXISTING CATCH BASIN.

DISCLAIMER

THE SURVEY INFORMATION FOR RIGHT-OF-WAY AND TOPOGRAPHIC DATA SHOWN HEREON WAS PERFORMED BY GROUP 4 (2011) AND PACE (2014). THE PROPERTY LINES AND STREET RIGHT-OF-WAY SHOWN HEREON ARE BASED ON INFORMATION OF PUBLIC RECORDS, NOT ON A SURVEYED LOCATION.

BURIED UTILITIES IN AREA
CALL BEFORE YOU DIG
1-800-424-5555
EXISTING UTILITIES SHOWN ARE FROM THE BEST AVAILABLE INFORMATION AND NO GUARANTEE IS MADE AS TO THE EXACT SIZE, TYPE, LOCATION OR DEPTH

APPROVAL FOR CONSTRUCTION

BY: TOWN OF YARROW POINT

DATE: _____

APPROVAL EXPIRES: _____

0 1" 2"
TWO INCHES AT FULL SCALE. IF NOT, SCALE ACCORDINGLY

Gray & Osborne, Inc.
CONSULTING ENGINEERS
3710 168TH STREET NE, BLDG. B, SUITE 210
ARLINGTON, WA 98223 • (360) 454-5490

DATE: AUG 2020	DRAWN: C.J.B.	CHECKED: K.W.B.	APPROVED: R.W.K

No.	REVISION	DATE	APPD

KEVIN W. BROWN — STATE OF WASHINGTON — 38319 — REGISTERED PROFESSIONAL ENGINEER

ROGER W. KUYKENDALL — STATE OF WASHINGTON — 35188 — REGISTERED PROFESSIONAL ENGINEER

TOWN OF YARROW POINT
KING COUNTY WASHINGTON
NE 42ND STREET/91ST AVENUE NE STORMWATER & UGC PROJECT
PLAN AND PROFILE

SHEET: 4
OF: 21

JOB NO.: 19456
DWG: PLAN AND PROFILE

M:\Yarrow Point\19456.00 42nd St - 91st Ave Storm\01 Design\PLANSET\Civil\PLAN AND PROFILE.dwg, 8/6/2020 6:09 PM, KEVIN BROWN

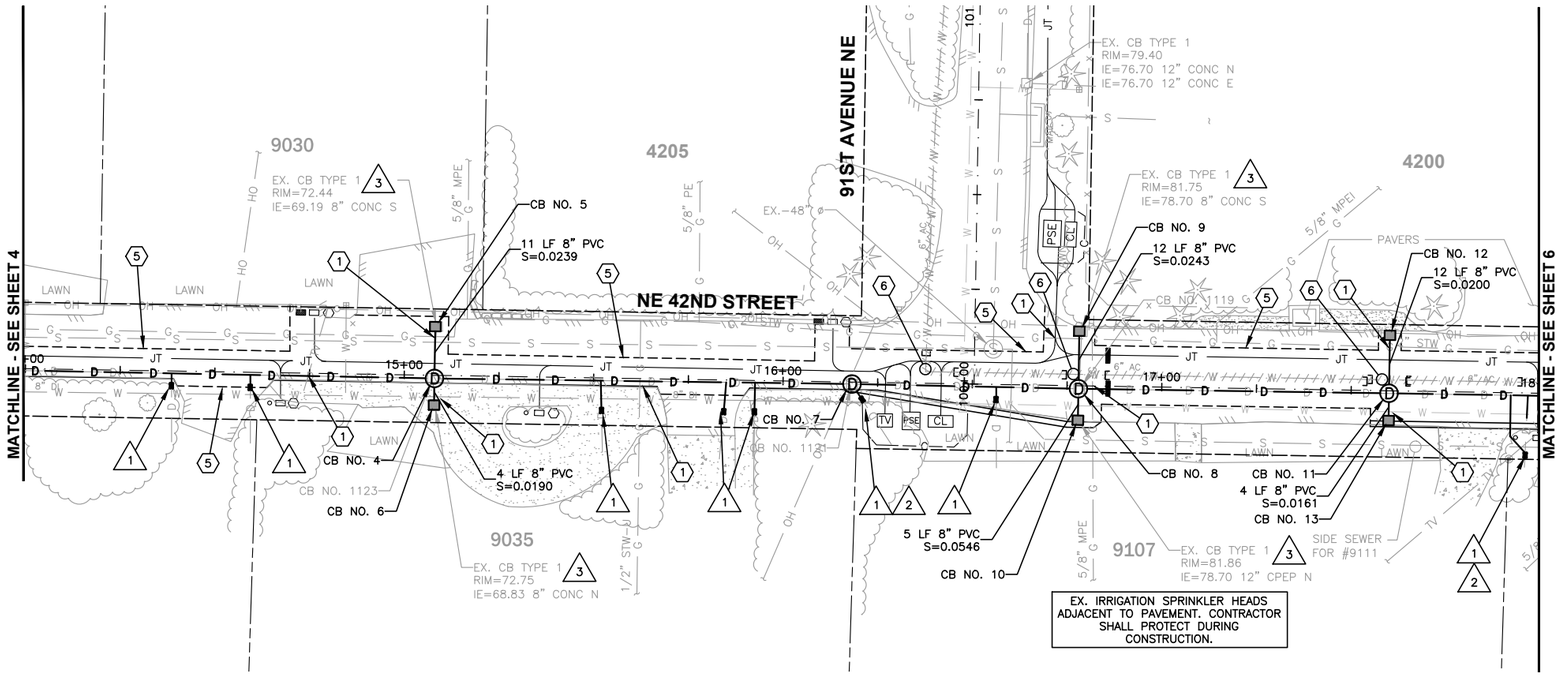

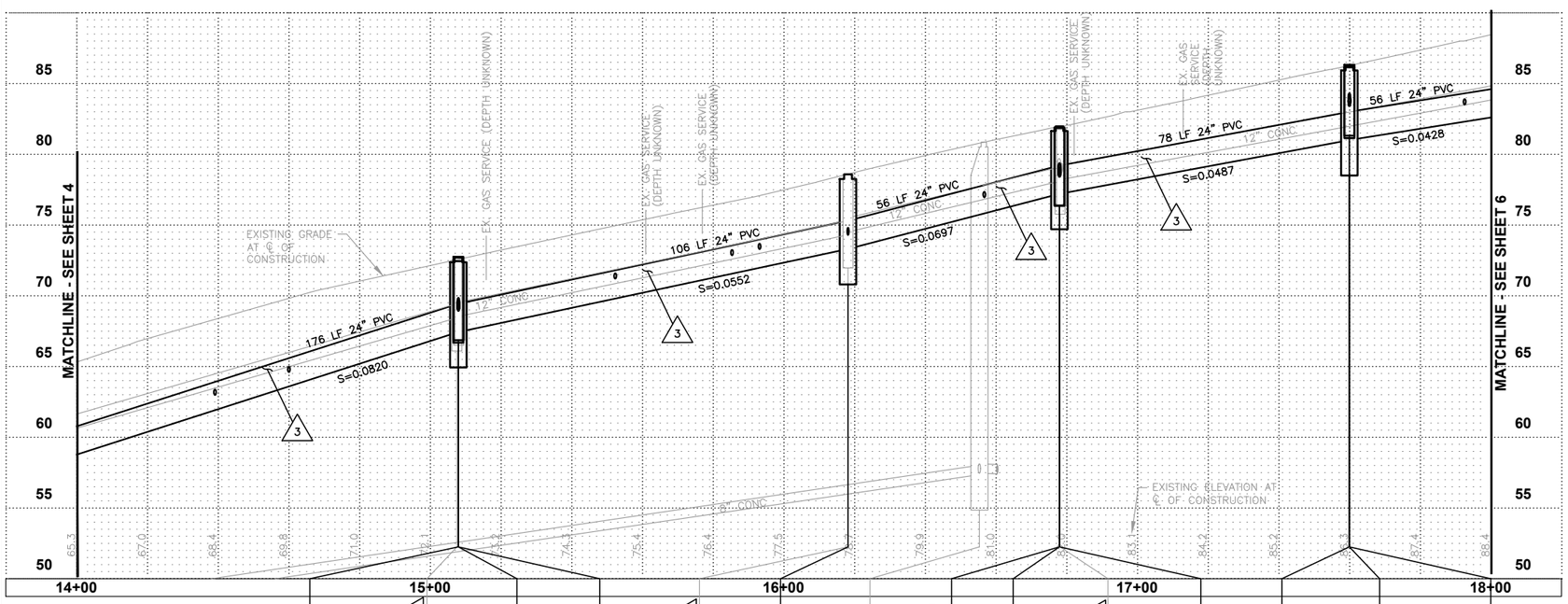

20' 10' 0 20' 40'

SCALE: HORIZONTAL 1"=20'
VERTICAL 1"=5'

CONSTRUCTION NOTES

1. CAUTION: POTENTIAL UTILITY CONFLICT. VERIFY (POTHOLE) EXACT LOCATION AND DEPTH OF EXISTING UTILITY. SEE ORDER OF WORK.
2. EXISTING UTILITY TO BE REMOVED/RELOCATED BY OTHERS. UTILITY COMPANY SHALL BE NOTIFIED FIVE (5) DAYS PRIOR TO THE DAY THE UTILITY NEEDS TO RELOCATED OR REMOVED. COORDINATE WORK WITH UTILITY COMPANIES.
3. CLEAR AND GRUB EXISTING BRUSH, SHRUBS, TURF, AND/OR VEGETATION AS NEEDED TO INSTALL/REPLACE CATCH BASIN.
4. PROTECT EXISTING DRIVEWAY, FENCE, WALL, TREE, LANDSCAPING, AND/OR PRIVATE IRRIGATION SYSTEM DURING CONSTRUCTION.
5. SAWCUT EXISTING PAVEMENT AND SEAL JOINT (WHERE APPLICABLE) THEN APPLY SAND BLANKET TO THE SURFACE JOINT.
6. ABANDONED EXISTING AC WATER MAIN. CONTRACTOR MAY REMOVE EX. AC WATER MAIN AS NEEDED TO INSTALL FACILITIES. EX. AC WATER MAIN SHALL THEN BE PLUGGED (BOTH SIDES).
7. REMOVE, PROTECT AND REINSATLL EXISTING MAILBOX PAGODA ON NEW CONCRETE PIER BLOCKS. REMOVE AND WASTEHAUL EXISTING CONCRETE PAD.

STORM NOTES

1. RECONNECT EXISTING STORM LATERAL PER DETAIL SHEET 8.
2. REALIGN EXISTING STORM LATERAL TO AVOID NEW IMPROVEMENTS.
3. REMOVE AND WASTEHAUL EXISTING STORM DRAINAGE STRUCTURE(S)/PIPE.
4. ABANDON EXISTING STORM STRUCTURE(S)/PIPE PER THE SPECIFICATIONS.
5. CONNECT NEW STORM PIPE TO EXISTING CATCH BASIN.

DISCLAIMER

THE SURVEY INFORMATION FOR RIGHT-OF-WAY AND TOPOGRAPHIC DATA SHOWN HEREON WAS PERFORMED BY GROUP 4 (2011) AND PACE (2014). THE PROPERTY LINES AND STREET RIGHT-OF-WAY SHOWN HEREON ARE BASED ON INFORMATION OF PUBLIC RECORDS, NOT ON A SURVEYED LOCATION.

BURIED UTILITIES IN AREA
CALL BEFORE YOU DIG
1-800-424-5555
EXISTING UTILITIES SHOWN ARE FROM THE BEST AVAILABLE INFORMATION AND NO GUARANTEE IS MADE AS TO THE EXACT SIZE, TYPE, LOCATION OR DEPTH

APPROVAL FOR CONSTRUCTION

BY: TOWN OF YARROW POINT

DATE: _____

APPROVAL EXPIRES: _____

0 1" 2"
TWO INCHES AT FULL SCALE. IF NOT, SCALE ACCORDINGLY

Gray & Osborne, Inc.
CONSULTING ENGINEERS
3710 168TH STREET NE, BLDG. B, SUITE 210
ARLINGTON, WA 98223 • (360) 454-5490

DATE: AUG 2020	DRAWN: C.J.B.	CHECKED: K.W.B.	APPROVED: R.W.K

No.	REVISION	DATE	APPD

KEVIN W. BROWN — STATE OF WASHINGTON — 35168 — REGISTERED PROFESSIONAL ENGINEER

ROGER W. KUYKENDALL — STATE OF WASHINGTON — 35168 — REGISTERED PROFESSIONAL ENGINEER

TOWN OF YARROW POINT
KING COUNTY WASHINGTON
NE 42ND STREET/91ST AVENUE NE STORMWATER & UGC PROJECT
PLAN AND PROFILE

SHEET: 5
OF: 21

JOB NO.: 19456
DWG: PLAN AND PROFILE

M:\Yarrow Point\19456.00 42nd St - 91st Ave Storm\01 Design\PLANSET\Civil\PLAN AND PROFILE.dwg, 8/6/2020 6:09 PM, KEVIN BROWN

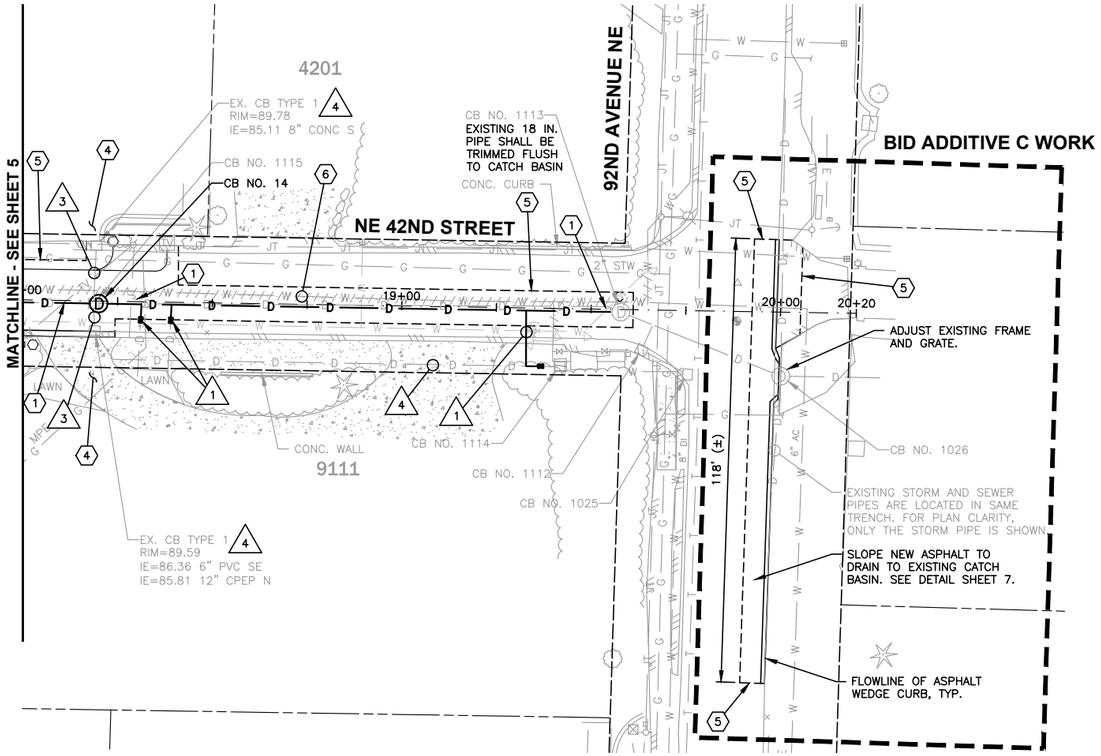

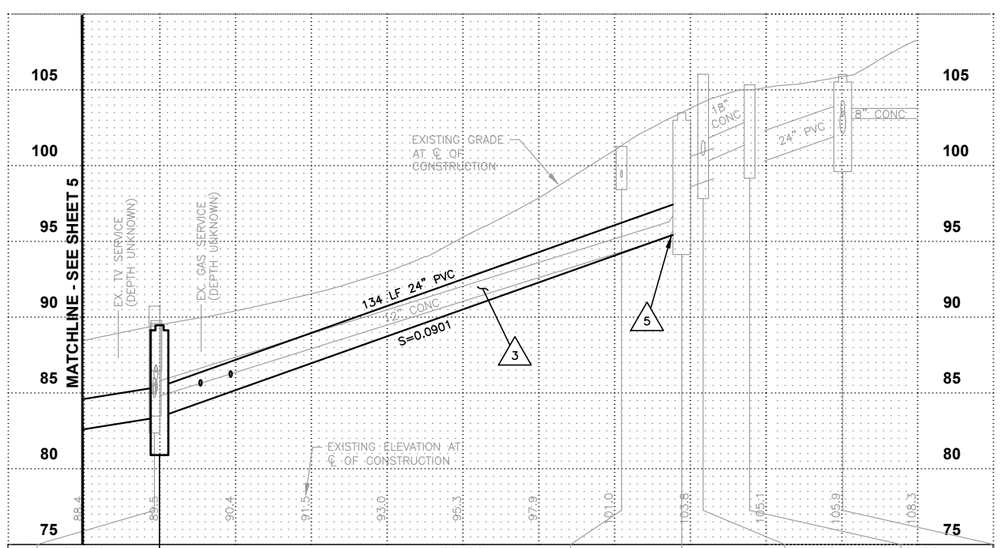

EX. CB NO. 1115
STA. 18+18.7, 0.7' RT
RIM=90.72
IE=84.69 12" CONC E
IE=85.04 12" CPEP S
IE=84.69 12" CONC W
IE=84.89 8" CONC N

TYPE 2, 48" ø, CB NO. 14
RIM=89.47
IE=83.40 24" PVC E
IE=83.40 24" PVC W

EX. CB TYPE 1
STA. 19+19.9, 15.3' RT
RIM=101.27
IE=99.21 6" PVC W

EX. CB NO. 1113
STA. 19+57.8, 0.7' RT
RIM=103.49
IE=98.40 24" PVC E
~~IE=96.63 12" PVC NW~~
IE=95.63 24" PVC W

EX. CB NO. 1112
STA. 19+63.5, 10.6' RT
RIM=106.03
IE=100.16 18" CONC SE
IE=100.66 12" PVC NE

EX. CB NO. 1025
STA. 19+75.7, 16.9' RT
RIM=105.33
IE=101.50 18" CONC NW

EX. CB NO. 1026
STA. 20+00.3, 16.9' RT
RIM=106.02
IE=102.11 18" CONC S
IE=102.11 24" PVC W
IE=103.11 8" CONC E
IE=103.31 12" CONC N

20' 10' 0 20' 40'
SCALE: HORIZONTAL 1"=20'
VERTICAL 1"=5'

CONSTRUCTION NOTES

1 CAUTION: POTENTIAL UTILITY CONFLICT. VERIFY (POTHOLE) EXACT LOCATION AND DEPTH OF EXISTING UTILITY. SEE ORDER OF WORK.

2 EXISTING UTILITY TO BE REMOVED/RELOCATED BY OTHERS. UTILITY COMPANY SHALL BE NOTIFIED FIVE (5) DAYS PRIOR TO THE DAY THE UTILITY NEEDS TO RELOCATED OR REMOVED. COORDINATE WORK WITH UTILITY COMPANIES.

3 CLEAR AND GRUB EXISTING BRUSH, SHRUBS, TURF, AND/OR VEGETATION AS NEEDED TO INSTALL/REPLACE CATCH BASIN.

4 PROTECT EXISTING DRIVEWAY, FENCE, WALL, TREE, LANDSCAPING, AND/OR PRIVATE IRRIGATION SYSTEM DURING CONSTRUCTION.

5 SAWCUT EXISTING PAVEMENT AND SEAL JOINT (WHERE APPLICABLE) THEN APPLY SAND BLANKET TO THE SURFACE JOINT.

6 ABANDONED EXISTING AC WATER MAIN. CONTRACTOR MAY REMOVE EX. AC WATER MAIN AS NEEDED TO INSTALL FACILITIES. EX. AC WATER MAIN SHALL THEN BE PLUGGED (BOTH SIDES).

7 REMOVE, PROTECT AND REINSATLL EXISTING MAILBOX PAGODA ON NEW CONCRETE PIER BLOCKS. REMOVE AND WASTEHAUL EXISTING CONCRETE PAD.

STORM NOTES

1 RECONNECT EXISTING STORM LATERAL PER DETAIL SHEET 8.

2 REALIGN EXISTING STORM LATERAL TO AVOID NEW IMPROVEMENTS.

3 REMOVE AND WASTEHAUL EXISTING STORM DRAINAGE STRUCTURE(S)/PIPE.

4 ABANDON EXISTING STORM STRUCTURE(S)/PIPE PER THE SPECIFICATIONS.

5 CONNECT NEW STORM PIPE TO EXISTING CATCH BASIN.

DISCLAIMER

THE SURVEY INFORMATION FOR RIGHT-OF-WAY AND TOPOGRAPHIC DATA SHOWN HEREON WAS PERFORMED BY GROUP 4 (2011) AND PACE (2014). THE PROPERTY LINES AND STREET RIGHT-OF-WAY SHOWN HEREON ARE BASED ON INFORMATION OF PUBLIC RECORDS, NOT ON A SURVEYED LOCATION.

BURIED UTILITIES IN AREA
CALL BEFORE YOU DIG
1-800-424-5555
EXISTING UTILITIES SHOWN ARE FROM THE BEST AVAILABLE INFORMATION AND NO GUARANTEE IS MADE AS TO THE EXACT SIZE, TYPE, LOCATION OR DEPTH

APPROVAL FOR CONSTRUCTION

BY: TOWN OF YARROW POINT

DATE: _____

APPROVAL EXPIRES: _____

0 1" 2"
TWO INCHES AT FULL SCALE. IF NOT, SCALE ACCORDINGLY

Gray & Osborne, Inc.
CONSULTING ENGINEERS
3710 168TH STREET NE, BLDG. B, SUITE 210
ARLINGTON, WA 98223 • (360) 454-5490

DATE: AUG 2020
DRAWN: C.J.B.
CHECKED: K.W.B.
APPROVED: R.W.K

No.	REVISION	DATE	APPD

KEVIN W. BROWN — STATE OF WASHINGTON — 35319 — REGISTERED PROFESSIONAL ENGINEER

ROGER W. KUYKENDALL — STATE OF WASHINGTON — 35168 — REGISTERED PROFESSIONAL ENGINEER

TOWN OF YARROW POINT
KING COUNTY WASHINGTON
NE 42ND STREET/91ST AVENUE NE STORMWATER & UGC PROJECT
PLAN AND PROFILE

SHEET: 6
OF: 21

JOB NO.: 19456
DWG: PLAN AND PROFILE

M:\Yarrow Point\19456.00 42nd St – 91st Ave Storm\01 Design\PLANSET\Civil\PLAN AND PROFILE.dwg, 8/6/2020 6:09 PM, KEVIN BROWN

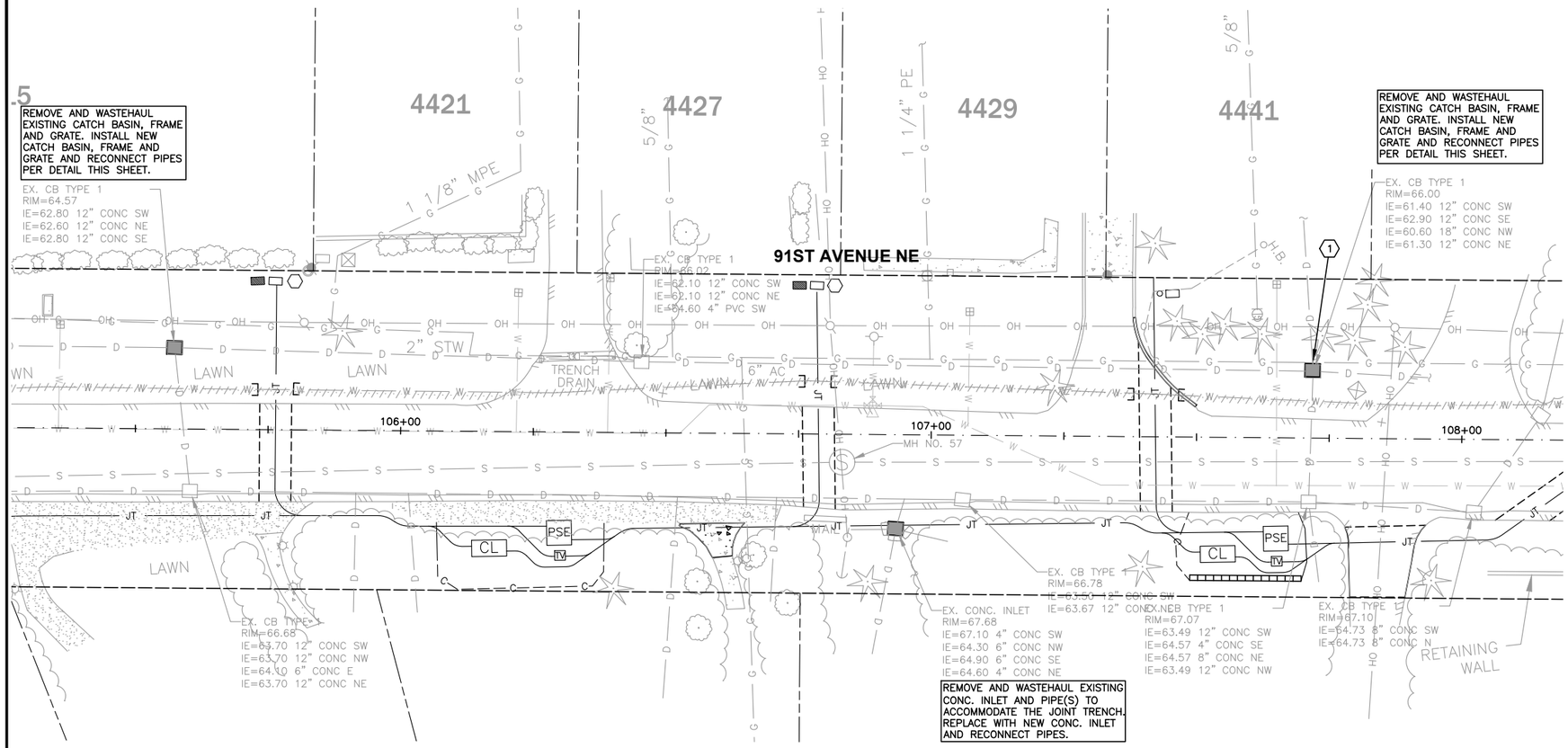

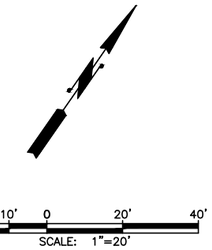

CONSTRUCTION NOTES

1. CAUTION: POTENTIAL UTILITY CONFLICT. VERIFY (POTHOLE) EXACT LOCATION AND DEPTH OF EXISTING UTILITY. SEE ORDER OF WORK.
2. EXISTING UTILITY TO BE REMOVED/RELOCATED BY OTHERS. UTILITY COMPANY SHALL BE NOTIFIED FIVE (5) DAYS PRIOR TO THE DAY THE UTILITY NEEDS TO RELOCATED OR REMOVED. COORDINATE WORK WITH UTILITY COMPANIES.
3. CLEAR AND GRUB EXISTING BRUSH, SHRUBS, TURF, AND/OR VEGETATION AS NEEDED TO INSTALL/REPLACE CATCH BASIN.
4. PROTECT EXISTING DRIVEWAY, FENCE, WALL, TREE, LANDSCAPING, AND/OR PRIVATE IRRIGATION SYSTEM DURING CONSTRUCTION.
5. SAWCUT EXISTING PAVEMENT AND SEAL JOINT (WHERE APPLICABLE) THEN APPLY SAND BLANKET TO THE SURFACE JOINT.
6. ABANDONED EXISTING AC WATER MAIN. CONTRACTOR MAY REMOVE EX. AC WATER MAIN AS NEEDED TO INSTALL FACILITIES. EX. AC WATER MAIN SHALL THEN BE PLUGGED (BOTH SIDES).
7. REMOVE, PROTECT AND REINSATLL EXISTING MAILBOX PAGODA ON NEW CONCRETE PIER BLOCKS. REMOVE AND WASTEHAUL EXISTING CONCRETE PAD.

STORM NOTES

1. RECONNECT EXISTING STORM LATERAL PER DETAIL SHEET 8.
2. REALIGN EXISTING STORM LATERAL TO AVOID NEW IMPROVEMENTS.
3. REMOVE AND WASTEHAUL EXISTING STORM DRAINAGE STRUCTURE(S)/PIPE.
4. ABANDON EXISTING STORM STRUCTURE(S)/PIPE PER THE SPECIFICATIONS.
5. CONNECT NEW STORM PIPE TO EXISTING CATCH BASIN.

NOTES:

1. HEAVY DUTY SAND COLLAR FOR ALL CONNECTIONS. (SIZE AS REQUIRED)
2. MAKE CONNECTION TO EX. PIPE WITH 3' LENGTH OF NEW PVC STORM PIPE (SIZE TO MATCH EX. PIPE) AND FERNCO ADAPTOR.

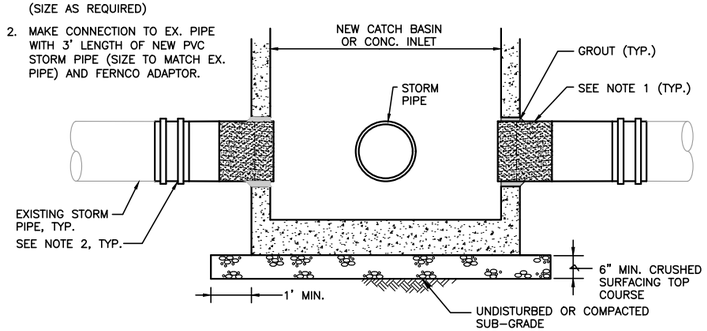

CATCH BASIN RECONNECTION DETAIL

NTS

DISCLAIMER

THE SURVEY INFORMATION FOR RIGHT-OF-WAY AND TOPOGRAPHIC DATA SHOWN HEREON WAS PERFORMED BY GROUP 4 (2011) AND PACE (2014). THE PROPERTY LINES AND STREET RIGHT-OF-WAY SHOWN HEREON ARE BASED ON INFORMATION OF PUBLIC RECORDS, NOT ON A SURVEYED LOCATION.

BURIED UTILITIES IN AREA
CALL BEFORE YOU DIG
1-800-424-5555
EXISTING UTILITIES SHOWN ARE FROM THE BEST AVAILABLE INFORMATION AND NO GUARANTEE IS MADE AS TO THE EXACT SIZE, TYPE, LOCATION OR DEPTH

APPROVAL FOR CONSTRUCTION

BY: TOWN OF YARROW POINT

DATE: _____

APPROVAL EXPIRES: _____

0 1" 2"
TWO INCHES AT FULL SCALE. IF NOT, SCALE ACCORDINGLY

Gray & Osborne, Inc.
CONSULTING ENGINEERS
3710 168TH STREET NE, BLDG. B, SUITE 210
ARLINGTON, WA 98223 • (360) 454-5490

DATE: AUG 2020	DRAWN: C.J.B.
CHECKED: K.W.B.	APPROVED: R.W.K

No.	REVISION	DATE	APPD

KEVIN W. BROWN — STATE OF WASHINGTON — 35385 — REGISTERED PROFESSIONAL ENGINEER

ROGER W. KUYKENDALL — STATE OF WASHINGTON — 35868 — REGISTERED PROFESSIONAL ENGINEER

TOWN OF YARROW POINT
WASHINGTON
KING COUNTY
NE 42ND STREET/91ST AVENUE NE
STORMWATER & UGC PROJECT
CATCH BASIN REPLACEMENT - 91ST AVENUE NE

SHEET: 7
OF: 21

JOB NO.: 19456
DWG: PLAN AND PROFILE

M:\Yarrow Point\19456.00 42nd St - 91st Ave Storm\01 Design\PLANSET\Civil\PLAN AND PROFILE.dwg, 8/6/2020 6:10 PM, KEVIN BROWN

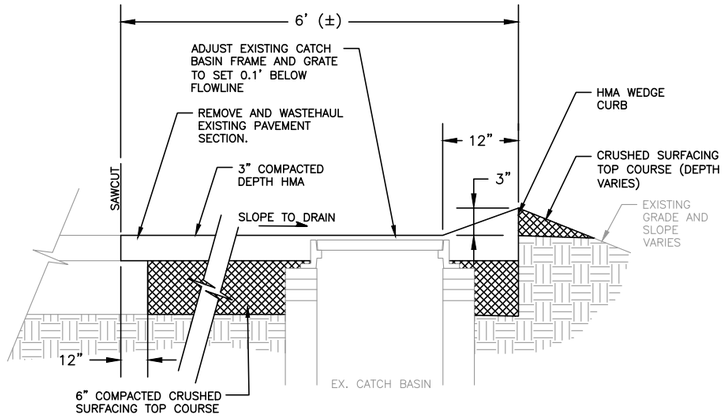

CATCH BASIN ADJUSTMENT DETAIL (92ND AVENUE NE)

NOT TO SCALE

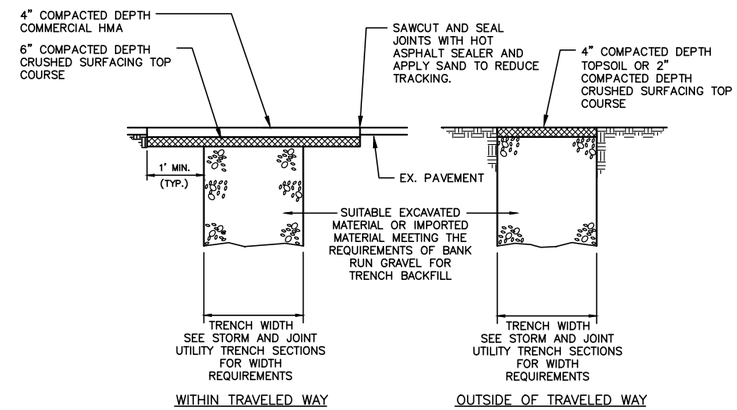

NOTES:

1. ALL STREETS SHALL BE PATCHED WITH TEMPORARY HMA WITHIN 24 HOURS CONSTRUCTION PROIVIDED NO WORK IS SCHEDULED TO OCCUR WITHIN THE NEXT 5 WORKING DAYS.

TRENCH RESTORATION DETAIL

NOT TO SCALE

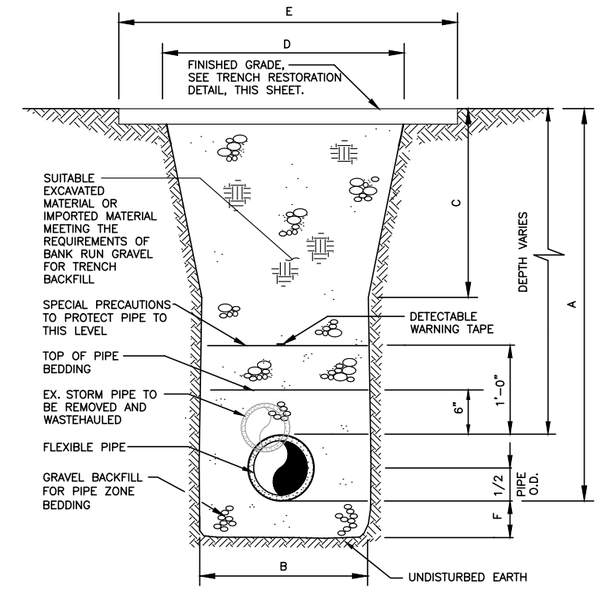

TYPICAL STORM TRENCH SECTION

NOT TO SCALE

4", 6", & 8" DIAMETER PIPE

	6' OR LESS	8'	10'	12'	14'	16'	18'	20'	22'	24'	26'	28'
A												
B	2.50'											
C	1.50'	1.50'	1.75'	2.25'	2.75'	3.25'	3.75'	4.25'	4.75'	5.25'	5.75'	6.25'
D	5.50'	5.50'	6.00'	7.00'	8.00'	9.00'	10.00'	11.00'	12.00'	13.00'	14.00'	15.00'
E	6.50'	6.50'	7.00'	8.00'	9.00'	10.00'	11.00'	12.00'	13.00'	14.00'	15.00'	16.00'
F	4 in											

24" DIAMETER PIPE

	6' OR LESS	8'	10'	12'	14'	16'	18'	20'	22'	24'	26'	28'
A												
B	4.50'											
C	1.50'	1.50'	1.75'	2.25'	2.75'	3.25'	3.75'	4.25'	4.75'	5.25'	5.75'	6.25'
D	7.50'	7.50'	8.00'	9.00'	10.00'	11.00'	12.00'	13.00'	14.00'	15.00'	16.00'	17.00'
E	8.50'	8.50'	9.00'	10.00'	11.00'	12.00'	13.00'	14.00'	15.00'	16.00'	17.00'	18.00'
F	6 in											

PAYMENT LIMIT SCHEDULE

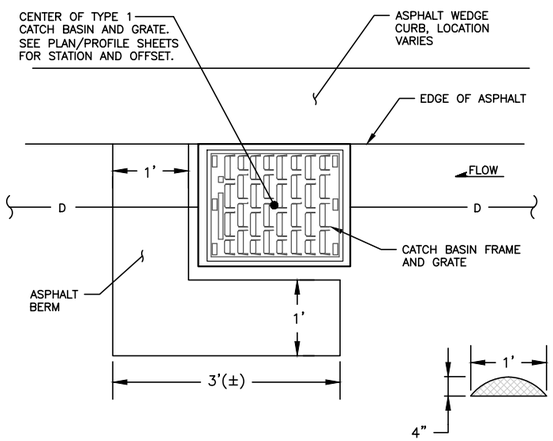

ASPHALT BERM SECTION

CATCH BASIN INSTALLATION DETAIL

NOT TO SCALE

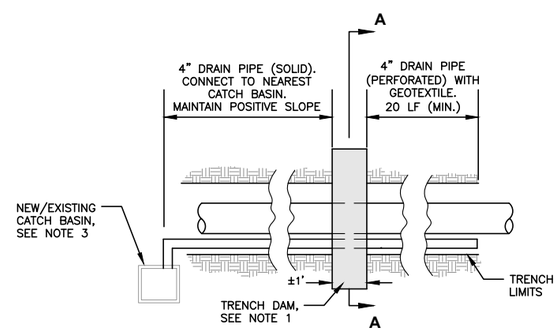

PLAN VIEW

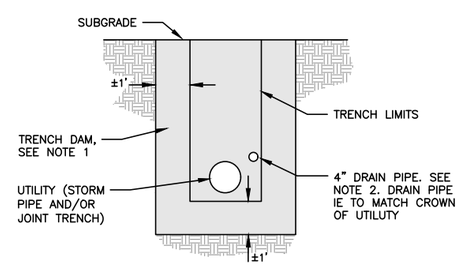

SECTION A-A

1. TRENCH DAMS SHALL BE CDF OR APPROVED EQUAL.
2. DRAIN PIPE SHALL BE SCHEDULE 40 PVC, JM EAGLE OR APPROVED EQUAL. BACKFILL AROUND DRAIN PIPE WITH DRAIN ROCK AND WRAP WITH A GEOTEXTILE, MIRAFI 180N FABRIC OR APPROVED EQUAL.
3. CORE DRILL AND SEAL GROUT 4" SOLID CPEP INTO EXISTING CB, PER SECTION 7-05.3 OF THE CURRENT WSDOT STANDARD SPECIFICATIONS.

TRENCH DAM DETAIL

NTS

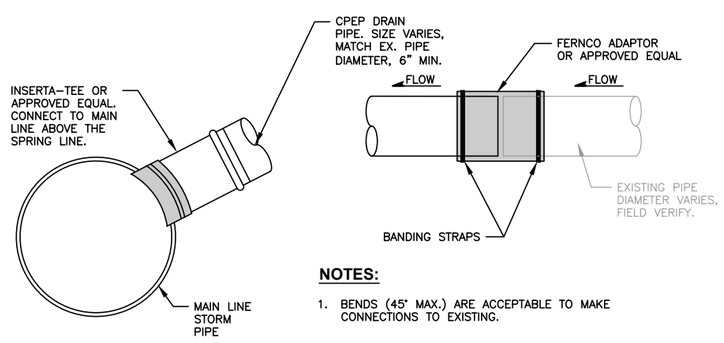

NOTES:

1. BENDS (45° MAX.) ARE ACCEPTABLE TO MAKE CONNECTIONS TO EXISTING.

STORM LATERAL RECONNECTION DETAIL

NOT TO SCALE

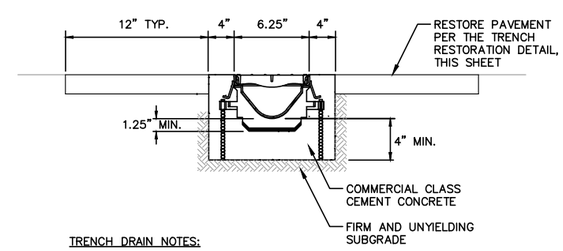

TRENCH DRAIN NOTES:

1. BRACE CHANNEL AND FRAME IN CONCRETE PER THE MANUFACTURER'S RECOMMENDATIONS. VIBRATE CONCRETE TO ELIMINATE VOIDS.
2. INSTALL GRATES PER THE MANUFACTURER'S RECOMMENDATIONS AFTER THE CONCRETE HAS CURED.
3. SLOT DRAIN SHALL BE ZURN FLO THRU Z886-HD OR APPROVED EQUAL.

TRENCH DRAIN DETAIL

NOT TO SCALE

BURIED UTILITIES IN AREA CALL BEFORE YOU DIG
1-800-424-5555
EXISTING UTILITIES SHOWN ARE FROM THE BEST AVAILABLE INFORMATION AND NO GUARANTEE IS MADE AS TO THE EXACT SIZE, TYPE, LOCATION OR DEPTH

APPROVAL FOR CONSTRUCTION

BY: TOWN OF YARROW POINT

DATE: _____

APPROVAL EXPIRES: _____

0 1" 2"
TWO INCHES AT FULL SCALE. IF NOT, SCALE ACCORDINGLY

Gray & Osborne, Inc.
CONSULTING ENGINEERS
3710 168TH STREET NE, BLDG. B, SUITE 210
ARLINGTON, WA 98223 • (360) 454-5490

DATE: AUG 2020
DRAWN: C.J.B.
CHECKED: K.W.B.
APPROVED: R.W.K

No.	REVISION	DATE	APPD

KEVIN W. BROWN — STATE OF WASHINGTON — 35319 — REGISTERED PROFESSIONAL ENGINEER

ROGER W. KUYKENDALL — STATE OF WASHINGTON — 35168 — REGISTERED PROFESSIONAL ENGINEER

TOWN OF YARROW POINT
KING COUNTY WASHINGTON
NE 42ND STREET/91ST AVENUE NE STORMWATER & UGC PROJECT
STORM DETAILS

SHEET: 8
OF: 21

JOB NO.: 19456
DWG: DETAILS

M:\Yarrow Point\19456.00 42nd St - 91st Ave Storm\01 Design\PLANSET\Civil\DETAILS.dwg, 8/6/2020 6:10 PM, KEVIN BROWN

DRAWN BY: LISA CYFORD

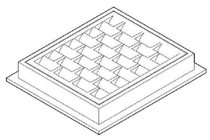

FRAME AND VANED GRATE

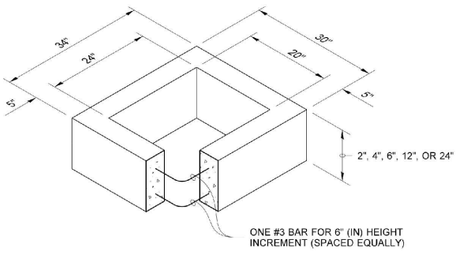

RECTANGULAR ADJUSTMENT SECTION

PIPE ALLOWANCES	
PIPE MATERIAL	MAXIMUM INSIDE DIAMETER (INCHES)
REINFORCED OR PLAIN CONCRETE	12"
ALL METAL PIPE	15"
CPSSP * (STD. SPEC. SECT. 9-05.20)	12"
SOLID WALL PVC (STD. SPEC. SECT. 9-05.12(1))	15"
PROFILE WALL PVC (STD. SPEC. SECT. 9-05.12(2))	15"

* CORRUGATED POLYETHYLENE STORM SEWER PIPE

NOTES

1. As acceptable alternatives to the rebar shown in the **PRECAST BASE SECTION**, fibers (placed according to the Standard Specifications), or wire mesh having a minimum area of 0.12 square inches per foot shall be used with the minimum required rebar shown in the ALTERNATIVE **PRECAST BASE SECTION**. Wire mesh shall not be placed in the knockouts.
2. The knockout diameter shall not be greater than 20" (in). Knockouts shall have a wall thickness of 2" (in) minimum to 2.5" (in) maximum. Provide a 1.5" (in) minimum gap between the knockout wall and the outside of the pipe. After the pipe is installed, fill the gap with joint mortar in accordance with **Standard Specification Section 9-04.3**.
3. The maximum depth from the finished grade to the lowest pipe invert shall be 5' (ft).
4. The frame and grate may be installed with the flange down, or integrally cast into the adjustment section with flange up.
5. The Precast Base Section may have a rounded floor, and the walls may be sloped at a rate of 1 : 24 or steeper.
6. The opening shall be measured at the top of the **Precast Base Section**.
7. All pickup holes shall be grouted full after the basin has been placed.
8. INSTALL BASIN ON 6" MIN. COMPACTED CRUSHED SURFACING TOP COURSE
9. ALL PIPE CONNECTIONS SHALL BE MADE WITH A HEAVY DUTY SAND COLLAR.

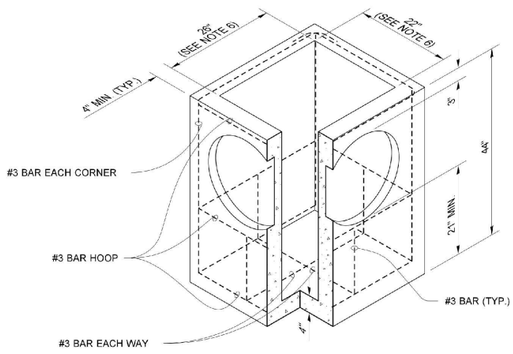

PRECAST BASE SECTION

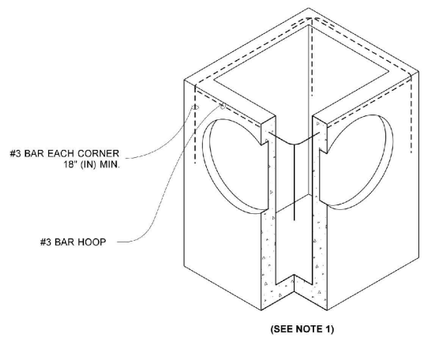

ALTERNATIVE PRECAST BASE SECTION

JULIE HEILMAN STATE OF WASHINGTON 41819 REGISTERED PROFESSIONAL ENGINEER

Heilman, Julie
Jan 25 2017 2:53 PM

CATCH BASIN TYPE 1

STANDARD PLAN B-5.20-02

SHEET 1 OF 1 SHEET

APPROVED FOR PUBLICATION
Carpenter, Jeff
Jan 26 2017 6:48 AM
STATE DESIGN ENGINEER
Washington State Department of Transportation

DRAWN BY: FERN LIDDELL

NOTES

1. No steps are required when height is 4' or less.
2. The bottom of the precast catch basin may be sloped to facilitate cleaning.
3. The rectangular frame and grate may be installed with the flange up or down. The frame may be cast into the adjustment section.
4. Knockouts shall have a wall thickness of 2" (in) minimum to 2.5" (in) maximum. Provide a 1.5" (in) minimum gap between the knockout wall and the outside of the pipe. After the pipe is installed, fill the gap with joint mortar in accordance with **Standard Specification Section 9-04.3.**
5. INSTALL BASIN ON 6" MIN. COMPACTED CRUSHED SURFACING TOP COURSE
6. ALL PIPE CONNECTIONS SHALL BE MADE WITH A HEAVY DUTY SAND COLLAR.

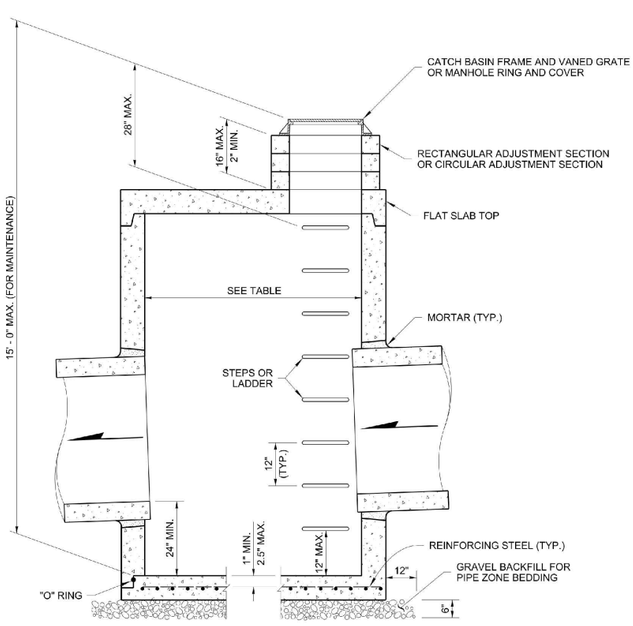

SEPARATE BASE
PRECAST

INTEGRAL BASE
PRECAST WITH RISER
(48" (IN) - 72" (IN) ONLY)

CATCH BASIN DIMENSIONS				
CATCH BASIN DIAMETER	MIN. WALL THICKNESS	MIN. BASE THICKNESS	MAXIMUM KNOCKOUT SIZE	MINIMUM DISTANCE BETWEEN KNOCKOUTS
48"	4"	6"	36"	8"
54"	4.5"	8"	42"	8"
60"	5"	8"	48"	8"
72"	6"	8"	60"	12"
84"	8"	12"	72"	12"
96"	8"	12"	84"	12"
120"	10"	12"	96"	12"
144"	12"	12"	108"	12"

PIPE ALLOWANCES					
CATCH BASIN DIAMETER	PIPE MATERIAL WITH MAXIMUM INSIDE DIAMETER				
	CONCRETE	ALL METAL	CPSSP ① PP ④	SOLID WALL PVC ②	PROFILE WALL PVC ③
48"	24"	30"	24"	30"	30"
54"	30"	36"	30"	36"	36"
60"	36"	42"	36"	42"	42"
72"	42"	54"	42"	48"	48"
84"	54"	60"	54"	48"	48"
96"	60"	72"	60"	48"	48"
120"	66"	84"	60"	48"	48"
144"	78"	96"	60"	48"	48"

① Corrugated Polyethylene Storm Sewer Pipe (See **Standard Specification Section 9-05.20**)
② (See **Standard Specification Section 9-05.12(1)**)
③ (See **Standard Specification Section 9-05.12(2)**)
④ Polypropylene Pipe (See **Standard Specification Section 9-05.24**)

JULIE HEILMAN STATE OF WASHINGTON 41819 REGISTERED PROFESSIONAL ENGINEER

Heilman, Julie
Feb 20 2018 12:49 PM

CATCH BASIN TYPE 2

STANDARD PLAN B-10.20-02

SHEET 1 OF 1 SHEET

APPROVED FOR PUBLICATION
Carpenter, Jeff
Mar 2 2018 10:01 AM
STATE DESIGN ENGINEER
Washington State Department of Transportation

APPROVAL FOR CONSTRUCTION

BY: TOWN OF YARROW POINT

DATE:

APPROVAL EXPIRES:

BURIED UTILITIES IN AREA CALL BEFORE YOU DIG 1-800-424-5555
EXISTING UTILITIES SHOWN ARE FROM THE BEST AVAILABLE INFORMATION AND NO GUARANTEE IS MADE AS TO THE EXACT SIZE, TYPE, LOCATION OR DEPTH

0 1" 2"
TWO INCHES AT FULL SCALE. IF NOT, SCALE ACCORDINGLY

SHEET: 9 OF: 21
JOB NO.: 19456
DWG: DETAILS

TOWN OF YARROW POINT
KING COUNTY WASHINGTON
NE 42ND STREET/91ST AVENUE NE STORMWATER & UGC PROJECT
STORM DETAILS

ROGER W. KUYKENDALL STATE OF WASHINGTON 35188 REGISTERED PROFESSIONAL ENGINEER
KEVIN W. BROWN STATE OF WASHINGTON 39319 REGISTERED PROFESSIONAL ENGINEER

No.	REVISION	DATE	APPD

DATE: AUG 2020
DRAWN: C.J.B.
CHECKED: K.W.B.
APPROVED: R.W.K

Gray & Osborne, Inc.
CONSULTING ENGINEERS
3710 168TH STREET NE, BLDG. B, SUITE 210
ARLINGTON, WA 98223 • (360) 454-5490

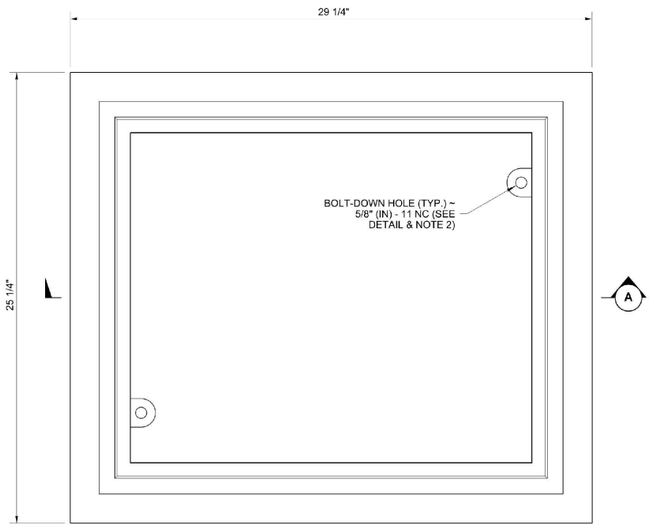

TOP

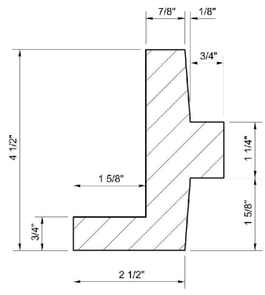

DETAIL B

NOTES

1. This frame is designed to accommodate 20" (in) × 24" (in) grates or covers as shown on **Standard Plans B-30.20, B-30.30, B-30.40,** and **B-30.50.**
2. Bolt-down capability is required on all frames, grates, and covers, unless specified otherwise in the Contract. Provide 2 holes in the frame that are vertically aligned with the grate or cover slots. The frame shall accept the 304 Stainless Steel (S.S.) 5/8" (in) - 11 NC × 2" (in) allen head cap screw by being tapped, or other approved mechanism. Location of bolt-down holes varies by manufacturer.
3. Refer to **Standard Specification Section 9-05.15** and **9-05.15(2)** for additional requirements.

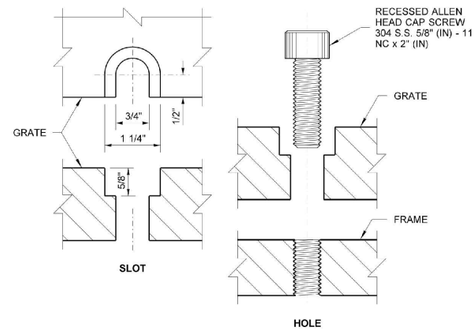

BOLT-DOWN DETAILS
SEE NOTE 2

DRAWN BY: FERN LIDDELL

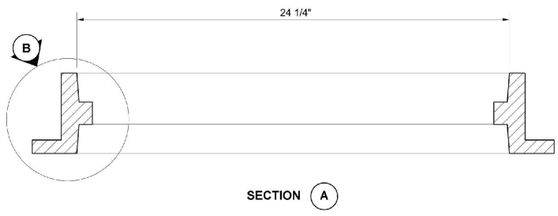

SECTION A

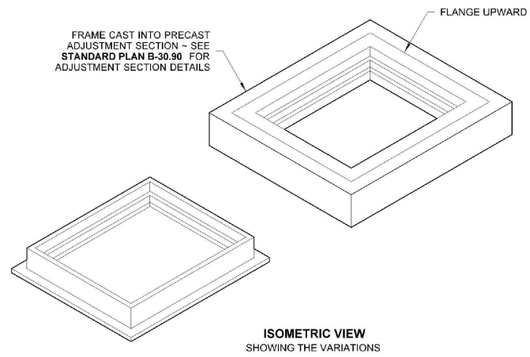

ISOMETRIC VIEW
SHOWING THE VARIATIONS

JULIE HEILMAN STATE OF WASHINGTON 41818 REGISTERED PROFESSIONAL ENGINEER
Heilman, Julie
Feb 20 2018 12:52 PM

RECTANGULAR FRAME (REVERSIBLE)

STANDARD PLAN B-30.10-03

SHEET 1 OF 1 SHEET

APPROVED FOR PUBLICATION
Carpenter, Jeff
Feb 27 2018 7:55 AM
STATE DESIGN ENGINEER
Washington State Department of Transportation

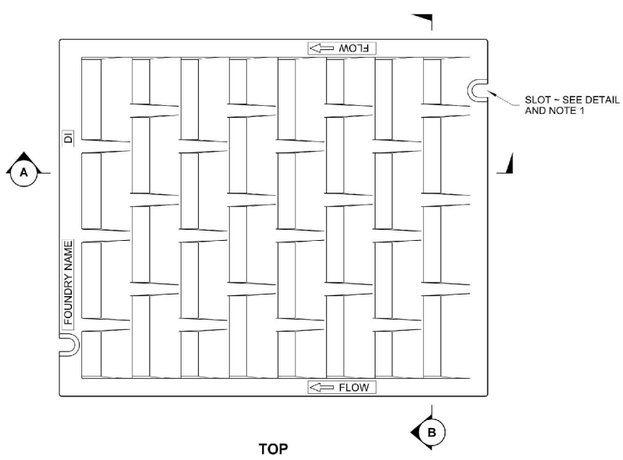

TOP

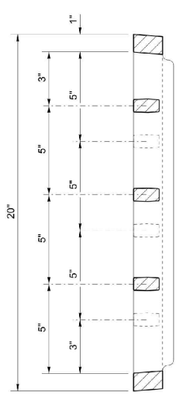

SECTION B

NOTES

1. Bolt-down capability is required on all frames, grates, and covers, unless specified otherwise in the Contract. Provide 2 holes in the frame that are vertically aligned with the grate or cover slots. The frame shall accept the 304 Stainless Steel (S.S.) 5/8" (in) - 11 NC × 2" (in) allen head cap screw by being tapped, or other approved mechanism. Location of bolt-down holes varies by manufacturer.
2. Refer to **Standard Specification Section 9-05.15** and **9-05.15(2)** for additional requirements.
3. For frame details, see **Standard Plan B-30.10**.

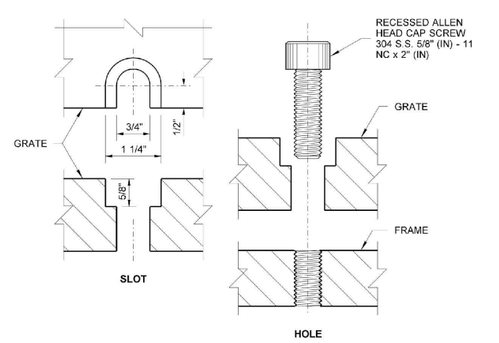

BOLT-DOWN DETAILS
SEE NOTE 1

DRAWN BY: FERN LIDDELL

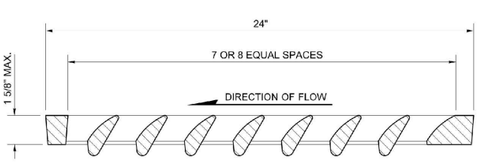

SECTION A

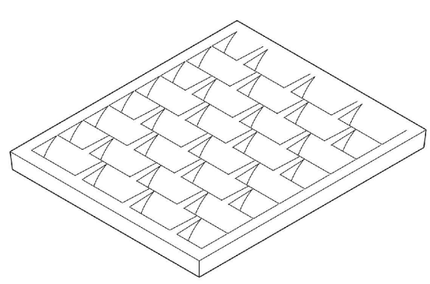

ISOMETRIC

JULIE HEILMAN STATE OF WASHINGTON 41818 REGISTERED PROFESSIONAL ENGINEER
Heilman, Julie
Feb 20 2018 12:54 PM

RECTANGULAR VANED GRATE

STANDARD PLAN B-30.30-03

SHEET 1 OF 1 SHEET

APPROVED FOR PUBLICATION
Carpenter, Jeff
Feb 27 2018 7:58 AM
STATE DESIGN ENGINEER
Washington State Department of Transportation

APPROVAL FOR CONSTRUCTION

BY: TOWN OF YARROW POINT

DATE:

APPROVAL EXPIRES:

BURIED UTILITIES IN AREA CALL BEFORE YOU DIG 1-800-424-5555
EXISTING UTILITIES SHOWN ARE FROM THE BEST AVAILABLE INFORMATION AND NO GUARANTEE IS MADE AS TO THE EXACT SIZE, TYPE, LOCATION OR DEPTH.

0 1" 2"
TWO INCHES AT FULL SCALE. IF NOT, SCALE ACCORDINGLY

SHEET: 10 OF: 21	**TOWN OF YARROW POINT** KING COUNTY WASHINGTON **NE 42ND STREET/91ST AVENUE NE STORMWATER & UGC PROJECT** **STORM DETAILS**	ROGER W. KUYKENDALL STATE OF WASHINGTON 35188 REGISTERED PROFESSIONAL ENGINEER KEVIN W. BROWN STATE OF WASHINGTON 39319 REGISTERED PROFESSIONAL ENGINEER	DATE: AUG 2020 DRAWN: C.J.B. CHECKED: K.W.B. APPROVED: R.W.K

No.	REVISION	DATE	APPD

Gray & Osborne, Inc.
CONSULTING ENGINEERS
3710 168TH STREET NE, BLDG. B, SUITE 210
ARLINGTON, WA 98223 • (360) 454-5490

JOB NO.: 19456
DWG: DETAILS

DRAWN BY: FERN LIDDELL

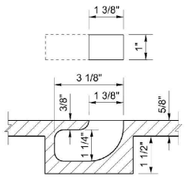

BLIND PICK NOTCH
DETAIL "A"

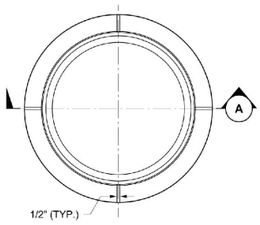

RING PLAN

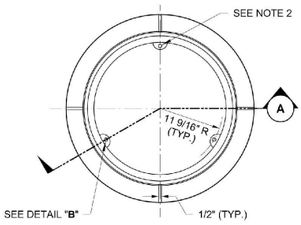

RING PLAN

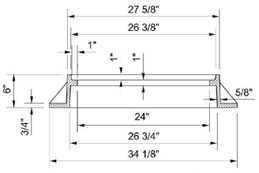

RING SECTION (A)

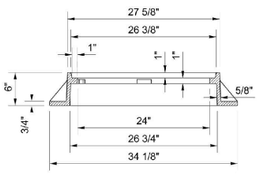

RING SECTION (A)

NOTES

1. The gasket and groove may be in the seat (frame) or in the underside of the cover. The gasket may be "T" shaped in section. The groove may be cast or machined.
2. Bolt-down capability is required on **all** frames, grates, and covers, unless specified otherwise in the Contract. Provide 3 holes in the frame that are vertically aligned with the grate or cover slots. The frame shall accept the 304 Stainless Steel (S.S) 5/8" - 11 NC x 2" (in) allen head cap screw by being tapped, or other approved mechanism. Location of bolt down holes varies by manufacturer.
3. For bolt-down manhole ring and covers that are not designated "Watertight," the neoprene gasket, groove, and washer are not required.
4. Washer shall be neoprene (Detail "B").
5. In lieu of blind pick notch for manhole covers, a single 1" (in) pick hole is acceptable. Hole location and number of holes may vary by manufacturer.
6. Alternative reinforcing designs are acceptable in lieu of the rib design.
7. For clarity, the vertical scale of the Cover Section has been exaggerated, it is 1.5 times the horizontal scale (1H:1.5V).

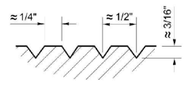

SKID GROOVE PATTERN DETAIL

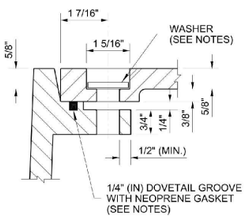

BOLT-DOWN / WATERTIGHT
DETAIL "B"

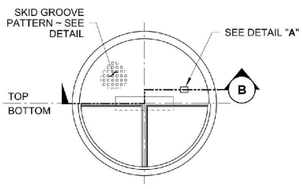

COVER PLAN

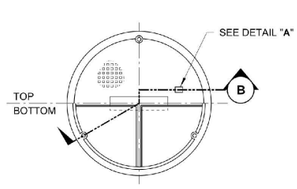

COVER PLAN

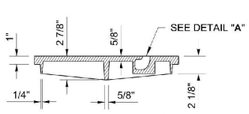

COVER SECTION (B)
(SEE NOTE 7)

STANDARD
TYPE 1

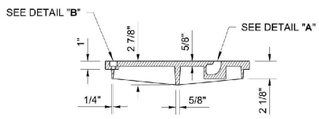

COVER SECTION (B)
(SEE NOTE 7)

BOLT-DOWN / WATERTIGHT
TYPE 2

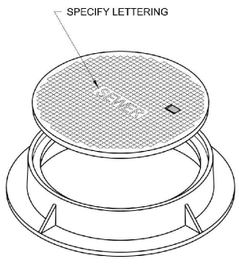

ISOMETRIC VIEW

Heilman, Julie
Feb 20 2018 12:55 PM

CIRCULAR FRAME (RING) AND COVER

STANDARD PLAN B-30.70-04

SHEET 1 OF 1 SHEET

APPROVED FOR PUBLICATION
Carpenter, Jeff
Feb 27 2018 7:59 AM
STATE DESIGN ENGINEER
Washington State Department of Transportation

DRAWN BY: FERN LIDDELL

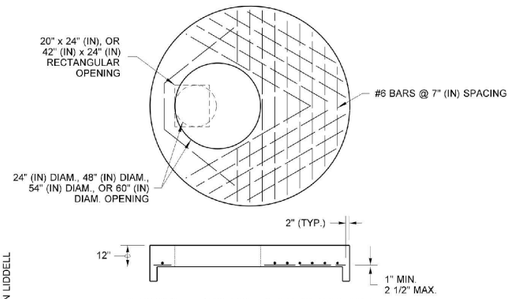

84" (IN) or 96" (IN) FLAT SLAB TOP

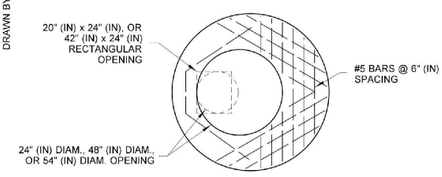

72" (IN) FLAT SLAB TOP

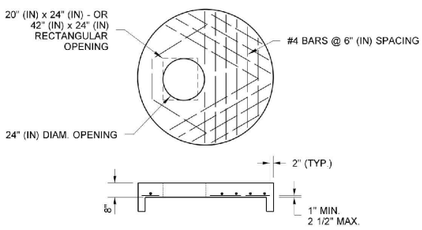

48" (IN), 54", or 60" (IN) FLAT SLAB TOP

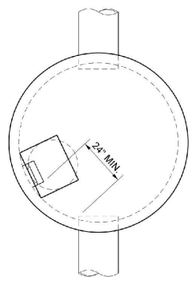

TYPICAL ORIENTATION
FOR ACCESS AND STEPS

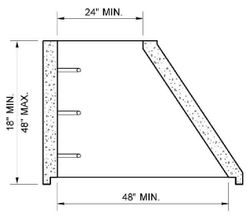

ECCENTRIC CONE SECTION

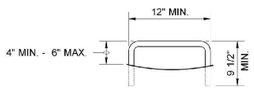

STEP

NOTE

1. Ladder rungs for manholes and catch basins shall meet the requirements of **AASHTO M 199.**

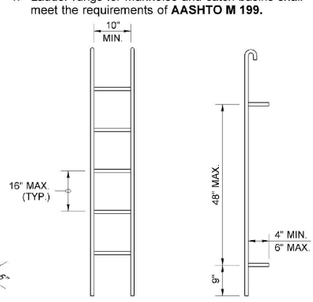

PREFABRICATED LADDER

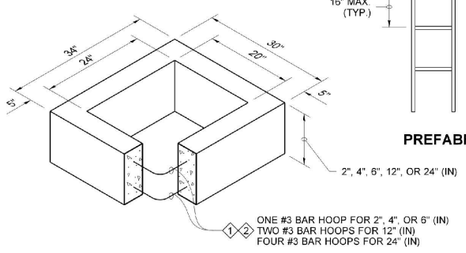

RECTANGULAR ADJUSTMENT SECTION

1. As an acceptable alternative to rebar, wire mesh having a minimum area of 0.12 square inches per foot may be used for adjustment sections.
2. As an acceptable alternative to conventional steel reinforcment, manufacturers shall use Synthetic Structural Fibers meeting the requirements of **Standard Specification Section 9-05.50(10)**.

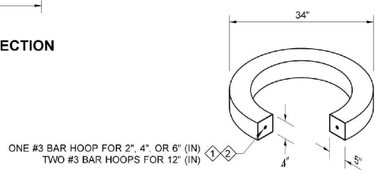

CIRCULAR ADJUSTMENT SECTION
For rectangular and circular adjustment sections, approved alternate material compositions are acceptable in lieu of precast concrete designs

Heilman, Julie
Jan 25 2017 3:01 PM

MISCELLANEOUS DETAILS
FOR
DRAINAGE STRUCTURES
STANDARD PLAN B-30.90-02

SHEET 1 OF 1 SHEET

APPROVED FOR PUBLICATION
Carpenter, Jeff
Jan 26 2017 6:52 AM
STATE DESIGN ENGINEER
Washington State Department of Transportation

APPROVAL FOR CONSTRUCTION

BY: TOWN OF YARROW POINT

DATE:

APPROVAL EXPIRES:

BURIED UTILITIES IN AREA
CALL BEFORE YOU DIG
1-800-424-5555
EXISTING UTILITIES SHOWN ARE FROM THE BEST AVAILABLE INFORMATION AND NO GUARANTEE IS MADE AS TO THE EXACT SIZE, TYPE, LOCATION OR DEPTH.

0 1" 2"
TWO INCHES AT FULL SCALE.
IF NOT, SCALE ACCORDINGLY

SHEET: 11
OF: 21
JOB NO.: 19456
DWG: DETAILS

TOWN OF YARROW POINT

KING COUNTY WASHINGTON

NE 42ND STREET/91ST AVENUE NE
STORMWATER & UGC PROJECT

STORM DETAILS

No.	REVISION	DATE	APPD

DATE: AUG 2020
DRAWN: C.J.B.
CHECKED: K.W.B.
APPROVED: R.W.K

Gray & Osborne, Inc.
CONSULTING ENGINEERS
3710 168TH STREET NE, BLDG. B, SUITE 210
ARLINGTON, WA 98223 • (360) 454-5490

CONSTRUCTION NOTES

1. CAUTION: POTENTIAL UTILITY CONFLICT. VERIFY (POTHOLE) EXACT LOCATION AND DEPTH OF EXISTING UTILITY. SEE ORDER OF WORK.
2. DENSE VEGETATION: CLEAR AND GRUB EXISTING BRUSH, SHRUBS, AND/OR TURF AS NEEDED TO INSTALL FACILITIES.
3. CLEAR AND GRUB EXISTING TREE.
4. PROTECT EXISTING FENCE, WALL, TREE, AND LANDSCAPING, DURING CONSTRUCTION.
5. SAWCUT EXISTING PAVEMENT AND SEAL JOINT (WHERE APPLICABLE) THEN APPLY SAND BLANKET TO THE SURFACE JOINT.
6. ABANDONED EXISTING AC WATER MAIN. CONTRACTOR MAY REMOVE EX. AC WATER MAIN AS NEEDED TO INSTALL FACILITIES. EX. AC WATER MAIN SHALL THEN BE PLUGGED (BOTH SIDES).
7. REMOVE, PROTECT AND REINSATLL EXISTING MAILBOX PAGODA ON NEW CONCRETE PIER BLOCKS. REMOVE AND WASTEHAUL EXISTING CONCRETE PAD.
8. EXISTING WATER SERVICE LINE(S) SHALL BE CUT, REALIGNED AND RECONNECTED TO ACCOMMODATE THE NEW UTILITY STRUCTURES AND CONDUITS. COORDINATE WITH CITY OF BELLEVUE ANY WORK THAT EXPOSES THEIR FACILITIES.
9. CONSTRUCT MODULAR BLOCK RETAINING WALL PER DETAIL SHEET 20.
10. CONSTRUCT CDF TRENCH DAM PER DETAIL SHEET 8.

GENERAL NOTES

1. SEE SPECIFICATIONS FOR PSE, COMCAST AND CENTURYLINK PLANS FOR ADDITIONAL CONDUIT AND STRUCTURE INFORMATION.
2. EXISTING OVERHEAD AND UNDERGROUND UTILITIES SHALL REMAIN IN USE UNTIL THE NEW UNDERGROUND SYSTEM IS COMPLETED AND ACCEPTED BY THE UTILITY COMPANIES. COORDINATE THE SWITCH OVERS WITH THE UTILITY COMPANIES.

JOINT UTILITY TRENCH CONSTRUCTION NOTES

1. CONSTRUCT JOINT UTILITY TRENCH PER DETAIL SHEET 19. INSTALL UTILITY FURNISHED CONDUIT PER PSE, COMCAST AND CENTURYLINK PLANS.
2. CONSTRUCT COMBINED STORM/JOINT UTILITY TRENCH PER DETAIL SHEET 19. INSTALL CONTRACTOR PROVIDED STORM PIPE AND UTILITY FURNISHED CONDUIT.
3. CONSTRUCT JOINT SERVICE TRENCH PER DETAIL SHEET 19. INSTALL UTILITY FURNISHED CONDUIT PER PSE, COMCAST AND CENTURYLINK PLANS.
4. EXCAVATE, INSTALL AND BACKFILL UTILITY FURNISHED VAULT, HANDHOLE, JUNCTION BOX, AND/OR STRUCTURE PER PSE, COMCAST AND CENTURYLINK PLANS. SEE UTILITY STRUCTURE NOTES.
5. EXISTING FACILITY TO BE REMOVED BY OTHERS. COORDINATE WORK WITH UTILITY COMPANIES.

20' 10' 0 20' 40'
SCALE: 1"=20'

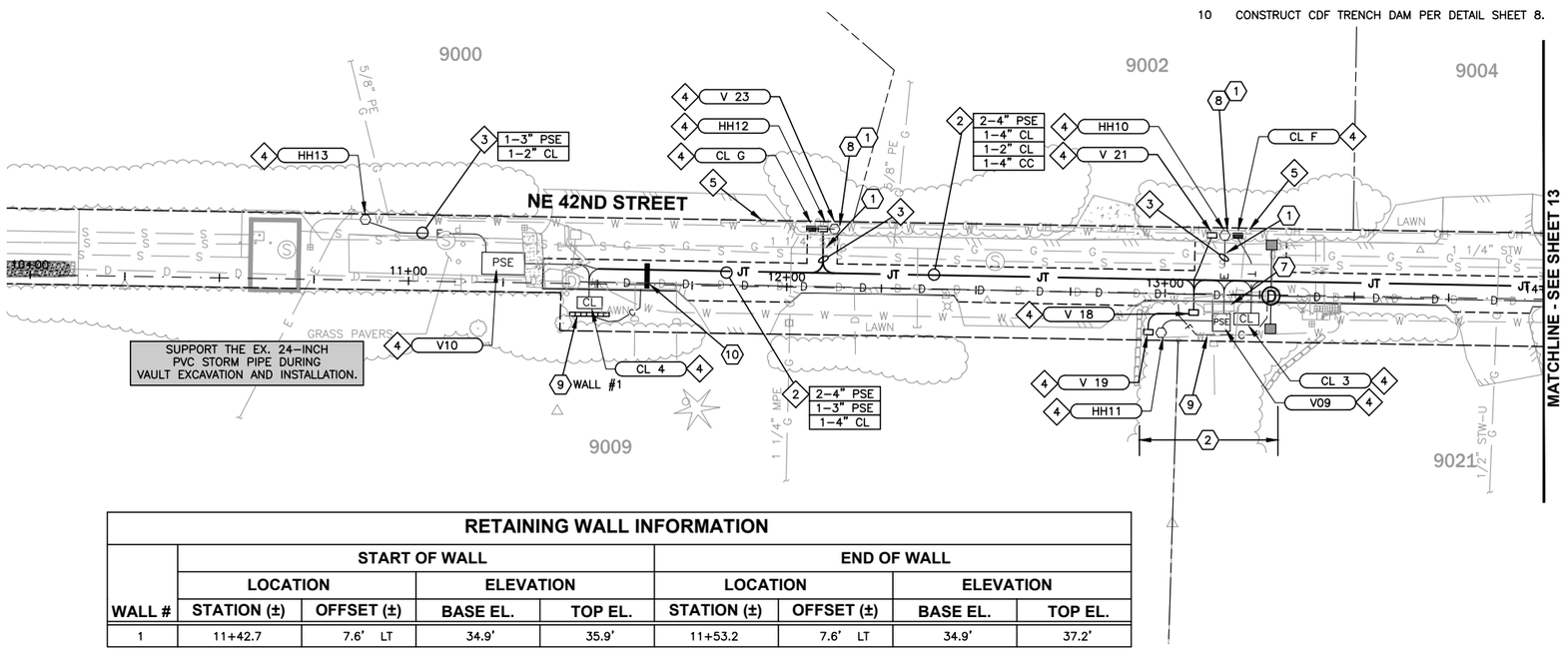

RETAINING WALL INFORMATION

WALL #	START OF WALL LOCATION STATION (±)	START OF WALL LOCATION OFFSET (±)	START OF WALL ELEVATION BASE EL.	START OF WALL ELEVATION TOP EL.	END OF WALL LOCATION STATION (±)	END OF WALL LOCATION OFFSET (±)	END OF WALL ELEVATION BASE EL.	END OF WALL ELEVATION TOP EL.
1	11+42.7	7.6' LT	34.9'	35.9'	11+53.2	7.6' LT	34.9'	37.2'

UTILITY STRUCTURE SCHEDULE

ID	STATION	OFFSET		EL. (±)	STRUCTURE DESCRIPTION
PSE					
HH13	10+88.4	16.0'	LT	29.2'	HANDHOLE, CONCRETE 3030
V10	11+25.0	5.0'	LT	33.5'	VAULT, 5106 TUT
HH12	12+12.4	15.5'	LT	43.5'	HANDHOLE, CONCRETE 3030
HH11	12+99.1	10.5'	RT	53.9'	HANDHOLE, CONCRETE 3030
V09	13+15.0	7.5'	RT	56.6'	VAULT, 507 TUT
HH10	13+15.6	15.5'	LT	56.1'	HANDHOLE, CONCRETE 3030
COMCAST (CC)					
V 23	12+09.3	15.5'	LT	43.1'	VAULT, SGLB 1730
V 19	12+95.8	10.4'	RT	53.8'	VAULT, SGLB 1730
V 18	13+07.6	5.0'	RT	55.6'	VAULT, SGLB 1730
V 21	13+12.2	15.5'	LT	55.7'	VAULT, SGLB 1730
CENTURYLINK (CL)					
CL 4	11+48.0	5.0'	RT	35.4'	VAULT, 264-TA
CL G	12+06.2	15.5'	LT	42.8'	HANDHOLE, 1730
CL F	13+19.0	15.5'	LT	56.7'	HANDHOLE, 1730
CL 3	13+21.6	6.5'	RT	56.9'	VAULT, 264-TA

UTILITY STRUCTURE NOTES

1. STRUCTURE LOCATIONS SHALL BE MARKED IN THE FIELD AND APPROVED BY THE UTILITY OWNER PRIOR TO EXCAVATION. THE CONTRACTOR SHALL NOTIFY UTILITY COMPANIES A MINIMUM OF ONE (1) WEEK PRIOR TO MARKING THE LOCATIONS.
2. SIZE AND DEPTH OF EXCAVATION FOR CENTURYLINK AND COMCAST HANDHOLE AND VAULTS SHALL BE EQUAL TO THE LENGTH, WIDTH AND HEIGHT OF STRUCTURE PLUS 6". (SEE SPECIFICATIONS FOR STRUCTURE DIMENSIONS AND DETAILS). PLACE STRUCTURE ON 6" COMPACTED CRUSHED SURFACING TOP COURSE PAD.
3. SIZE AND DEPTH OF EXCAVATION FOR PSE STRUCTURES SHALL CONFORM TO PSE PLANS.

DISCLAIMER

THE SURVEY INFORMATION FOR RIGHT-OF-WAY AND TOPOGRAPHIC DATA SHOWN HEREON WAS PERFORMED BY GROUP 4 (2011) AND PACE (2014). THE PROPERTY LINES AND STREET RIGHT-OF-WAY SHOWN HEREON ARE BASED ON INFORMATION OF PUBLIC RECORDS, NOT ON A SURVEYED LOCATION.

BURIED UTILITIES IN AREA
CALL BEFORE YOU DIG
1-800-424-5555
EXISTING UTILITIES SHOWN ARE FROM THE BEST AVAILABLE INFORMATION AND NO GUARANTEE IS MADE AS TO THE EXACT SIZE, TYPE, LOCATION OR DEPTH

APPROVAL FOR CONSTRUCTION

BY: TOWN OF YARROW POINT _____

DATE: _____

APPROVAL EXPIRES: _____

0 1" 2"
TWO INCHES AT FULL SCALE. IF NOT, SCALE ACCORDINGLY

Gray & Osborne, Inc.
CONSULTING ENGINEERS
3710 168TH STREET NE, BLDG. B, SUITE 210
ARLINGTON, WA 98223 • (360) 454-5490

DATE: AUG 2020
DRAWN: C.J.B.
CHECKED: K.W.B.
APPROVED: R.W.K

No.	REVISION	DATE	APPD

KEVIN W. BROWN, STATE OF WASHINGTON, 35159, REGISTERED PROFESSIONAL ENGINEER
ROGER W. KUYKENDALL, STATE OF WASHINGTON, 32588, REGISTERED PROFESSIONAL ENGINEER

TOWN OF YARROW POINT
KING COUNTY WASHINGTON
NE 42ND STREET/91ST AVENUE NE STORMWATER & UGC PROJECT
JOINT UTILITY TRENCH PLAN

SHEET: 12
OF: 21
JOB NO.: 19456
DWG: UGC PLAN

M:\Yarrow Point\19456.00 42nd St - 91st Ave Storm\01 Design\PLANSET\Civil\UGC PLAN.dwg, 8/6/2020 6:11 PM, KEVIN BROWN

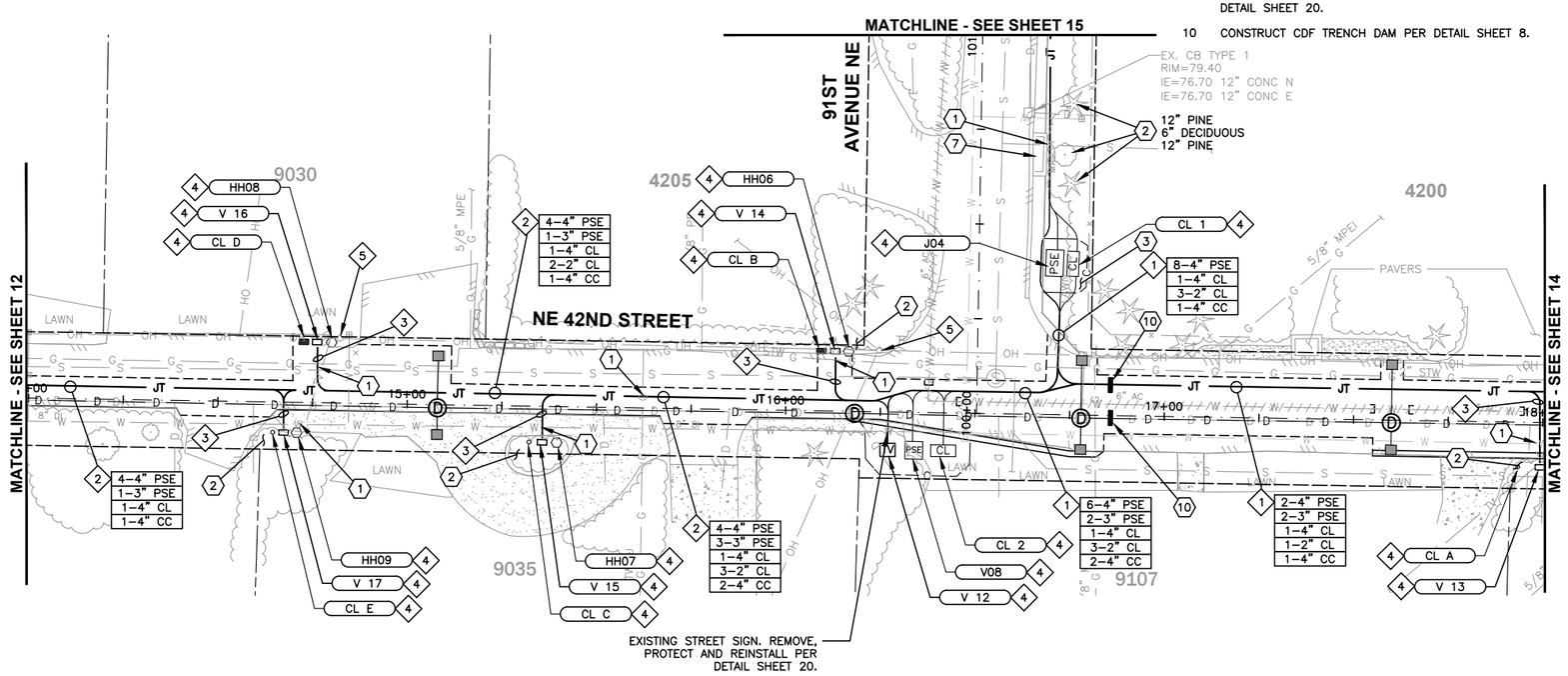

CONSTRUCTION NOTES

1. CAUTION: POTENTIAL UTILITY CONFLICT. VERIFY (POTHOLE) EXACT LOCATION AND DEPTH OF EXISTING UTILITY. SEE ORDER OF WORK.
2. DENSE VEGETATION: CLEAR AND GRUB EXISTING BRUSH, SHRUBS, AND/OR TURF AS NEEDED TO INSTALL FACILITIES.
3. CLEAR AND GRUB EXISTING TREE.
4. PROTECT EXISTING FENCE, WALL, TREE, AND LANDSCAPING, DURING CONSTRUCTION.
5. SAWCUT EXISTING PAVEMENT AND SEAL JOINT (WHERE APPLICABLE) THEN APPLY SAND BLANKET TO THE SURFACE JOINT.
6. ABANDONED EXISTING AC WATER MAIN. CONTRACTOR MAY REMOVE EX. AC WATER MAIN AS NEEDED TO INSTALL FACILITIES. EX. AC WATER MAIN SHALL THEN BE PLUGGED (BOTH SIDES).
7. REMOVE, PROTECT AND REINSATLL EXISTING MAILBOX PAGODA ON NEW CONCRETE PIER BLOCKS. REMOVE AND WASTEHAUL EXISTING CONCRETE PAD.
8. EXISTING WATER SERVICE LINE(S) SHALL BE CUT, REALIGNED AND RECONNECTED TO ACCOMMODATE THE NEW UTILITY STRUCTURES AND CONDUITS. COORDINATE WITH CITY OF BELLEVUE ANY WORK THAT EXPOSES THEIR FACILITIES.
9. CONSTRUCT MODULAR BLOCK RETAINING WALL PER DETAIL SHEET 20.
10. CONSTRUCT CDF TRENCH DAM PER DETAIL SHEET 8.

GENERAL NOTES

1. SEE SPECIFICATIONS FOR PSE, COMCAST AND CENTURYLINK PLANS FOR ADDITIONAL CONDUIT AND STRUCTURE INFORMATION.
2. EXISTING OVERHEAD AND UNDERGROUND UTILITIES SHALL REMAIN IN USE UNTIL THE NEW UNDERGROUND SYSTEM IS COMPLETED AND ACCEPTED BY THE UTILITY COMPANIES. COORDINATE THE SWITCH OVERS WITH THE UTILITY COMPANIES.

20' 10' 0 20' 40'
SCALE: 1"=20'

JOINT UTILITY TRENCH CONSTRUCTION NOTES

1. CONSTRUCT JOINT UTILITY TRENCH PER DETAIL SHEET 19. INSTALL UTILITY FURNISHED CONDUIT PER PSE, COMCAST AND CENTURYLINK PLANS.
2. CONSTRUCT COMBINED STORM/JOINT UTILITY TRENCH PER DETAIL SHEET 19. INSTALL CONTRACTOR PROVIDED STORM PIPE AND UTILITY FURNISHED CONDUIT.
3. CONSTRUCT JOINT SERVICE TRENCH PER DETAIL SHEET 19. INSTALL UTILITY FURNISHED CONDUIT PER PSE, COMCAST AND CENTURYLINK PLANS.
4. EXCAVATE, INSTALL AND BACKFILL UTILITY FURNISHED VAULT, HANDHOLE, JUNCTION BOX, AND/OR STRUCTURE PER PSE, COMCAST AND CENTURYLINK PLANS. SEE UTILITY STRUCTURE NOTES.
5. EXISTING FACILITY TO BE REMOVED BY OTHERS. COORDINATE WORK WITH UTILITY COMPANIES.

UTILITY STRUCTURE SCHEDULE

ID	STATION	OFFSET		EL. (±)	STRUCTURE DESCRIPTION
PSE					
HH09	14+70.9	8.0'	RT	71.1'	HANDHOLE, CONCRETE 3030
HH08	14+79.8	16.0'	LT	71.0'	HANDHOLE, CONCRETE 3030
HH07	15+39.6	9.5'	RT	75.6'	HANDHOLE, CONCRETE 3030
HH06	16+16.4	15.8'	LT	78.7'	HANDHOLE, CONCRETE 3030
V08	16+34.0	10.0'	RT	80.3'	VAULT, 507 TUT
J04	100+40.1	20.0'	RT	80.9'	VAULT, 575 J-BOX
COMCAST (CC)					
V 17	14+70.9	8.0'	RT	71.0'	VAULT, SGLB 1730
V 16	14+79.5	16.0'	LT	71.0'	VAULT, SGLB 1730
V 15	15+39.9	9.5'	RT	75.5'	VAULT, SGLB 1730
V 14	16+16.5	15.8'	LT	78.7'	VAULT, SGLB 1730
V 12	16+27.1	10.0'	RT	79.7'	VAULT, 3642-LA
V 13	17+99.4	11.8'	LT	88.6'	VAULT, SGLB 1730
CENTURYLINK (CL)					
CL E	14+64.6	8.0'	RT	70.6'	JUNCTION BOX, FLOWERPOT
CL D	14+72.5	16.0'	LT	78.0'	HANDHOLE, 1730
CL C	15+32.3	9.5'	RT	75.0'	JUNCTION BOX, FLOWERPOT
CL B	16+09.2	15.8'	LT	78.3'	HANDHOLE, 1730
CL 2	16+41.8	10.0'	RT	81.0'	VAULT, 264-TA
CL A	17+93.6	11.8'	RT	88.1'	HANDHOLE, 1730
CL 1	100+39.9	24.9'	RT	80.9'	VAULT, 264-TA

UTILITY STRUCTURE NOTES

1. STRUCTURE LOCATIONS SHALL BE MARKED IN THE FIELD AND APPROVED BY THE UTILITY OWNER PRIOR TO EXCAVATION. THE CONTRACTOR SHALL NOTIFY UTILITY COMPANIES A MINIMUM OF ONE (1) WEEK PRIOR TO MARKING THE LOCATIONS.
2. SIZE AND DEPTH OF EXCAVATION FOR CENTURYLINK AND COMCAST HANDHOLE AND VAULTS SHALL BE EQUAL TO THE LENGTH, WIDTH AND HEIGHT OF STRUCTURE PLUS 6". (SEE SPECIFICATIONS FOR STRUCTURE DIMENSIONS AND DETAILS). PLACE STRUCTURE ON 6" COMPACTED CRUSHED SURFACING TOP COURSE PAD.
3. SIZE AND DEPTH OF EXCAVATION FOR PSE STRUCTURES SHALL CONFORM TO PSE PLANS.

BURIED UTILITIES IN AREA
CALL BEFORE YOU DIG
1-800-424-5555
EXISTING UTILITIES SHOWN ARE FROM THE BEST AVAILABLE INFORMATION AND NO GUARANTEE IS MADE AS TO THE EXACT SIZE, TYPE, LOCATION OR DEPTH

DISCLAIMER

THE SURVEY INFORMATION FOR RIGHT-OF-WAY AND TOPOGRAPHIC DATA SHOWN HEREON WAS PERFORMED BY GROUP 4 (2011) AND PACE (2014). THE PROPERTY LINES AND STREET RIGHT-OF-WAY SHOWN HEREON ARE BASED ON INFORMATION OF PUBLIC RECORDS, NOT ON A SURVEYED LOCATION.

APPROVAL FOR CONSTRUCTION

BY: TOWN OF YARROW POINT

DATE: _____

APPROVAL EXPIRES: _____

0 1" 2"
TWO INCHES AT FULL SCALE. IF NOT, SCALE ACCORDINGLY

Gray & Osborne, Inc.
CONSULTING ENGINEERS
3710 168TH STREET NE, BLDG. B, SUITE 210
ARLINGTON, WA 98223 • (360) 454-5490

DATE: AUG 2020
DRAWN: C.J.B.
CHECKED: K.W.B.
APPROVED: R.W.K

No.	REVISION	DATE	APPD

KEVIN W. BROWN — STATE OF WASHINGTON — 45868 — REGISTERED PROFESSIONAL ENGINEER

ROGER W. KUYKENDALL — STATE OF WASHINGTON — 35198 — REGISTERED PROFESSIONAL ENGINEER

TOWN OF YARROW POINT
KING COUNTY WASHINGTON
NE 42ND STREET/91ST AVENUE NE STORMWATER & UGC PROJECT
JOINT UTILITY TRENCH PLAN

SHEET: 13
OF: 21
JOB NO.: 19456
DWG: UGC PLAN

M:\Yarrow Point\19456.00 42nd St - 91st Ave Storm\01 Design\PLANSET\Civil\UGC PLAN.dwg, 8/6/2020 6:11 PM, KEVIN BROWN

CONSTRUCTION NOTES

1. CAUTION: POTENTIAL UTILITY CONFLICT. VERIFY (POTHOLE) EXACT LOCATION AND DEPTH OF EXISTING UTILITY. SEE ORDER OF WORK.
2. DENSE VEGETATION: CLEAR AND GRUB EXISTING BRUSH, SHRUBS, AND/OR TURF AS NEEDED TO INSTALL FACILITIES.
3. CLEAR AND GRUB EXISTING TREE.
4. PROTECT EXISTING FENCE, WALL, TREE, AND LANDSCAPING, DURING CONSTRUCTION.
5. SAWCUT EXISTING PAVEMENT AND SEAL JOINT (WHERE APPLICABLE) THEN APPLY SAND BLANKET TO THE SURFACE JOINT.
6. ABANDONED EXISTING AC WATER MAIN. CONTRACTOR MAY REMOVE EX. AC WATER MAIN AS NEEDED TO INSTALL FACILITIES. EX. AC WATER MAIN SHALL THEN BE PLUGGED (BOTH SIDES).
7. REMOVE, PROTECT AND REINSATLL EXISTING MAILBOX PAGODA ON NEW CONCRETE PIER BLOCKS. REMOVE AND WASTEHAUL EXISTING CONCRETE PAD.
8. EXISTING WATER SERVICE LINE(S) SHALL BE CUT, REALIGNED AND RECONNECTED TO ACCOMMODATE THE NEW UTILITY STRUCTURES AND CONDUITS. COORDINATE WITH CITY OF BELLEVUE ANY WORK THAT EXPOSES THEIR FACILITIES.
9. CONSTRUCT MODULAR BLOCK RETAINING WALL PER DETAIL SHEET 20.
10. CONSTRUCT CDF TRENCH DAM PER DETAIL SHEET 8.

GENERAL NOTES

1. SEE SPECIFICATIONS FOR PSE, COMCAST AND CENTURYLINK PLANS FOR ADDITIONAL CONDUIT AND STRUCTURE INFORMATION.
2. EXISTING OVERHEAD AND UNDERGROUND UTILITIES SHALL REMAIN IN USE UNTIL THE NEW UNDERGROUND SYSTEM IS COMPLETED AND ACCEPTED BY THE UTILITY COMPANIES. COORDINATE THE SWITCH OVERS WITH THE UTILITY COMPANIES.

JOINT UTILITY TRENCH CONSTRUCTION NOTES

1. CONSTRUCT JOINT UTILITY TRENCH PER DETAIL SHEET 19. INSTALL UTILITY FURNISHED CONDUIT PER PSE, COMCAST AND CENTURYLINK PLANS.
2. CONSTRUCT COMBINED STORM/JOINT UTILITY TRENCH PER DETAIL SHEET 19. INSTALL CONTRACTOR PROVIDED STORM PIPE AND UTILITY FURNISHED CONDUIT.
3. CONSTRUCT JOINT SERVICE TRENCH PER DETAIL SHEET 19. INSTALL UTILITY FURNISHED CONDUIT PER PSE, COMCAST AND CENTURYLINK PLANS.
4. EXCAVATE, INSTALL AND BACKFILL UTILITY FURNISHED VAULT, HANDHOLE, JUNCTION BOX, AND/OR STRUCTURE PER PSE, COMCAST AND CENTURYLINK PLANS. SEE UTILITY STRUCTURE NOTES.
5. EXISTING FACILITY TO BE REMOVED BY OTHERS. COORDINATE WORK WITH UTILITY COMPANIES.

20' 10' 0 20' 40'
SCALE: 1"=20'

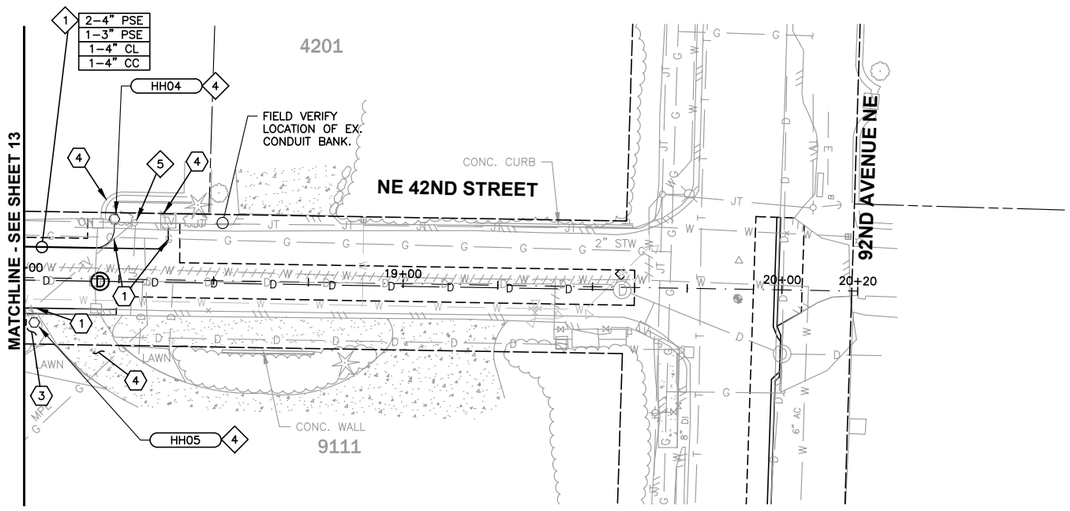

UTILITY STRUCTURE SCHEDULE

ID	STATION	OFFSET		EL. (±)	STRUCTURE DESCRIPTION
PSE					
HH05	18+02.8	11.8'	RT	88.7'	HANDHOLE, CONCRETE 3030
HH04	18+23.5	15.8'	LT	89.7'	HANDHOLE, CONCRETE 3030

UTILITY STRUCTURE NOTES

1. STRUCTURE LOCATIONS SHALL BE MARKED IN THE FIELD AND APPROVED BY THE UTILITY OWNER PRIOR TO EXCAVATION. THE CONTRACTOR SHALL NOTIFY UTILITY COMPANIES A MINIMUM OF ONE (1) WEEK PRIOR TO MARKING THE LOCATIONS.
2. SIZE AND DEPTH OF EXCAVATION FOR CENTURYLINK AND COMCAST HANDHOLE AND VAULTS SHALL BE EQUAL TO THE LENGTH, WIDTH AND HEIGHT OF STRUCTURE PLUS 6". (SEE SPECIFICATIONS FOR STRUCTURE DIMENSIONS AND DETAILS). PLACE STRUCTURE ON 6" COMPACTED CRUSHED SURFACING TOP COURSE PAD.
3. SIZE AND DEPTH OF EXCAVATION FOR PSE STRUCTURES SHALL CONFORM TO PSE PLANS.

DISCLAIMER

THE SURVEY INFORMATION FOR RIGHT-OF-WAY AND TOPOGRAPHIC DATA SHOWN HEREON WAS PERFORMED BY GROUP 4 (2011) AND PACE (2014). THE PROPERTY LINES AND STREET RIGHT-OF-WAY SHOWN HEREON ARE BASED ON INFORMATION OF PUBLIC RECORDS, NOT ON A SURVEYED LOCATION.

BURIED UTILITIES IN AREA
CALL BEFORE YOU DIG
1-800-424-5555
EXISTING UTILITIES SHOWN ARE FROM THE BEST AVAILABLE INFORMATION AND NO GUARANTEE IS MADE AS TO THE EXACT SIZE, TYPE, LOCATION OR DEPTH

APPROVAL FOR CONSTRUCTION

BY: TOWN OF YARROW POINT

DATE: _____

APPROVAL EXPIRES: _____

0 1" 2"
TWO INCHES AT FULL SCALE. IF NOT, SCALE ACCORDINGLY

Gray & Osborne, Inc.
CONSULTING ENGINEERS
3710 168TH STREET NE, BLDG. B, SUITE 210
ARLINGTON, WA 98223 • (360) 454-5490

DATE: AUG 2020
DRAWN: C.J.B.
CHECKED: K.W.B.
APPROVED: R.W.K

No.	REVISION	DATE	APPD

KEVIN W. BROWN — STATE OF WASHINGTON — 35389 — REGISTERED PROFESSIONAL ENGINEER

ROGER W. KUYKENDALL — STATE OF WASHINGTON — 23188 — REGISTERED PROFESSIONAL ENGINEER

TOWN OF YARROW POINT
KING COUNTY WASHINGTON
NE 42ND STREET/91ST AVENUE NE STORMWATER & UGC PROJECT
JOINT UTILITY TRENCH PLAN

SHEET: 14
OF: 21
JOB NO.: 19456
DWG: UGC PLAN

M:\Yarrow Point\19456.00 42nd St - 91st Ave Storm\01 Design\PLANSET\Civil\UGC PLAN.dwg, 8/6/2020 6:11 PM, KEVIN BROWN

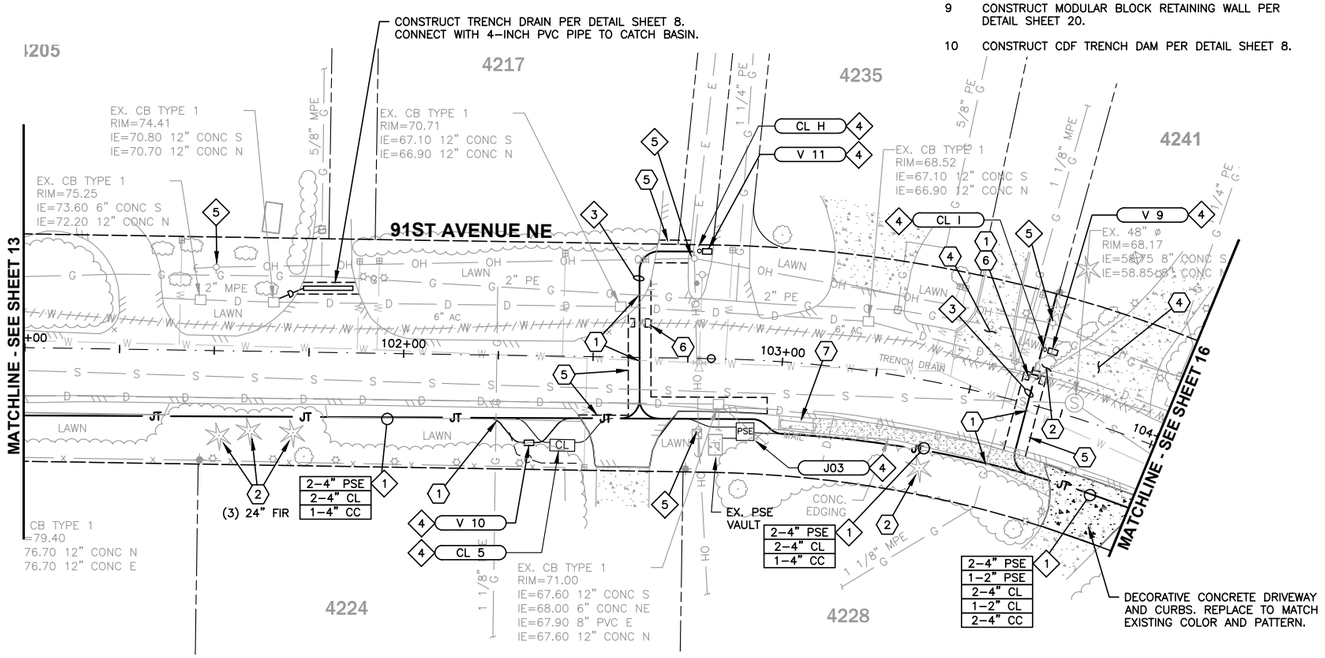

CONSTRUCTION NOTES

1. CAUTION: POTENTIAL UTILITY CONFLICT. VERIFY (POTHOLE) EXACT LOCATION AND DEPTH OF EXISTING UTILITY. SEE ORDER OF WORK.
2. DENSE VEGETATION: CLEAR AND GRUB EXISTING BRUSH, SHRUBS, AND/OR TURF AS NEEDED TO INSTALL FACILITIES.
3. CLEAR AND GRUB EXISTING TREE.
4. PROTECT EXISTING FENCE, WALL, TREE, AND LANDSCAPING, DURING CONSTRUCTION.
5. SAWCUT EXISTING PAVEMENT AND SEAL JOINT (WHERE APPLICABLE) THEN APPLY SAND BLANKET TO THE SURFACE JOINT.
6. ABANDONED EXISTING AC WATER MAIN. CONTRACTOR MAY REMOVE EX. AC WATER MAIN AS NEEDED TO INSTALL FACILITIES. EX. AC WATER MAIN SHALL THEN BE PLUGGED (BOTH SIDES).
7. REMOVE, PROTECT AND REINSATLL EXISTING MAILBOX PAGODA ON NEW CONCRETE PIER BLOCKS. REMOVE AND WASTEHAUL EXISTING CONCRETE PAD.
8. EXISTING WATER SERVICE LINE(S) SHALL BE CUT, REALIGNED AND RECONNECTED TO ACCOMMODATE THE NEW UTILITY STRUCTURES AND CONDUITS. COORDINATE WITH CITY OF BELLEVUE ANY WORK THAT EXPOSES THEIR FACILITIES.
9. CONSTRUCT MODULAR BLOCK RETAINING WALL PER DETAIL SHEET 20.
10. CONSTRUCT CDF TRENCH DAM PER DETAIL SHEET 8.

GENERAL NOTES

1. SEE SPECIFICATIONS FOR PSE, COMCAST AND CENTURYLINK PLANS FOR ADDITIONAL CONDUIT AND STRUCTURE INFORMATION.
2. EXISTING OVERHEAD AND UNDERGROUND UTILITIES SHALL REMAIN IN USE UNTIL THE NEW UNDERGROUND SYSTEM IS COMPLETED AND ACCEPTED BY THE UTILITY COMPANIES. COORDINATE THE SWITCH OVERS WITH THE UTILITY COMPANIES.

20' 10' 0 20' 40'
SCALE: 1"=20'

JOINT UTILITY TRENCH CONSTRUCTION NOTES

1. CONSTRUCT JOINT UTILITY TRENCH PER DETAIL SHEET 19. INSTALL UTILITY FURNISHED CONDUIT PER PSE, COMCAST AND CENTURYLINK PLANS.
2. CONSTRUCT COMBINED STORM/JOINT UTILITY TRENCH PER DETAIL SHEET 19. INSTALL CONTRACTOR PROVIDED STORM PIPE AND UTILITY FURNISHED CONDUIT.
3. CONSTRUCT JOINT SERVICE TRENCH PER DETAIL SHEET 19. INSTALL UTILITY FURNISHED CONDUIT PER PSE, COMCAST AND CENTURYLINK PLANS.
4. EXCAVATE, INSTALL AND BACKFILL UTILITY FURNISHED VAULT, HANDHOLE, JUNCTION BOX, AND/OR STRUCTURE PER PSE, COMCAST AND CENTURYLINK PLANS. SEE UTILITY STRUCTURE NOTES.
5. EXISTING FACILITY TO BE REMOVED BY OTHERS. COORDINATE WORK WITH UTILITY COMPANIES.

UTILITY STRUCTURE SCHEDULE

ID	STATION	OFFSET		EL. (±)	STRUCTURE DESCRIPTION
PSE					
J03	102+91.0	19.0'	RT	71.2'	VAULT, 504 J-BOX
COMCAST (CC)					
V 10	102+33.4	23.0'	RT	73.6'	VAULT, SGLB 1730
V 11	102+79.7	28.3'	LT	68.8'	VAULT, SGLB 1730
V 9	103+68.4	15.0'	LT	67.5'	VAULT, SGLB 1730
CENTURYLINK (CL)					
CL 5	102+42.3	23.5'	RT	73.6'	VAULT, 264-TA
CL H	102+77.6	28.3'	LT	68.8'	JUNCTION BOX, FLOWERPOT
CL I	103+66.3	15.0'	LT	67.5'	JUNCTION BOX, FLOWERPOT

UTILITY STRUCTURE NOTES

1. STRUCTURE LOCATIONS SHALL BE MARKED IN THE FIELD AND APPROVED BY THE UTILITY OWNER PRIOR TO EXCAVATION. THE CONTRACTOR SHALL NOTIFY UTILITY COMPANIES A MINIMUM OF ONE (1) WEEK PRIOR TO MARKING THE LOCATIONS.
2. SIZE AND DEPTH OF EXCAVATION FOR CENTURYLINK AND COMCAST HANDHOLE AND VAULTS SHALL BE EQUAL TO THE LENGTH, WIDTH AND HEIGHT OF STRUCTURE PLUS 6". (SEE SPECIFICATIONS FOR STRUCTURE DIMENSIONS AND DETAILS). PLACE STRUCTURE ON 6" COMPACTED CRUSHED SURFACING TOP COURSE PAD.
3. SIZE AND DEPTH OF EXCAVATION FOR PSE STRUCTURES SHALL CONFORM TO PSE PLANS.

DISCLAIMER

THE SURVEY INFORMATION FOR RIGHT-OF-WAY AND TOPOGRAPHIC DATA SHOWN HEREON WAS PERFORMED BY GROUP 4 (2011) AND PACE (2014). THE PROPERTY LINES AND STREET RIGHT-OF-WAY SHOWN HEREON ARE BASED ON INFORMATION OF PUBLIC RECORDS, NOT ON A SURVEYED LOCATION.

BURIED UTILITIES IN AREA
CALL BEFORE YOU DIG
1-800-424-5555
EXISTING UTILITIES SHOWN ARE FROM THE BEST AVAILABLE INFORMATION AND NO GUARANTEE IS MADE AS TO THE EXACT SIZE, TYPE, LOCATION OR DEPTH

APPROVAL FOR CONSTRUCTION

BY: TOWN OF YARROW POINT

DATE: _____

APPROVAL EXPIRES: _____

0 1" 2"
TWO INCHES AT FULL SCALE.
IF NOT, SCALE ACCORDINGLY

Gray & Osborne, Inc.
CONSULTING ENGINEERS
3710 168TH STREET NE, BLDG. B, SUITE 210
ARLINGTON, WA 98223 • (360) 454-5490

DATE: AUG 2020
DRAWN: C.J.B.
CHECKED: K.W.B.
APPROVED: R.W.K

No.	REVISION	DATE	APPD

KEVIN W. BROWN — STATE OF WASHINGTON — 45825 — REGISTERED PROFESSIONAL ENGINEER

ROGER W. KUYKENDALL — STATE OF WASHINGTON — 29598 — REGISTERED PROFESSIONAL ENGINEER

TOWN OF YARROW POINT
KING COUNTY WASHINGTON
NE 42ND STREET/91ST AVENUE NE STORMWATER & UGC PROJECT
JOINT UTILITY TRENCH PLAN

SHEET: 15
OF: 21

JOB NO.: 19456
DWG: UGC PLAN

M:\Yarrow Point\19456.00 42nd St - 91st Ave Storm\01 Design\PLANSET\Civil\UGC PLAN.dwg, 8/6/2020 6:11 PM, KEVIN BROWN

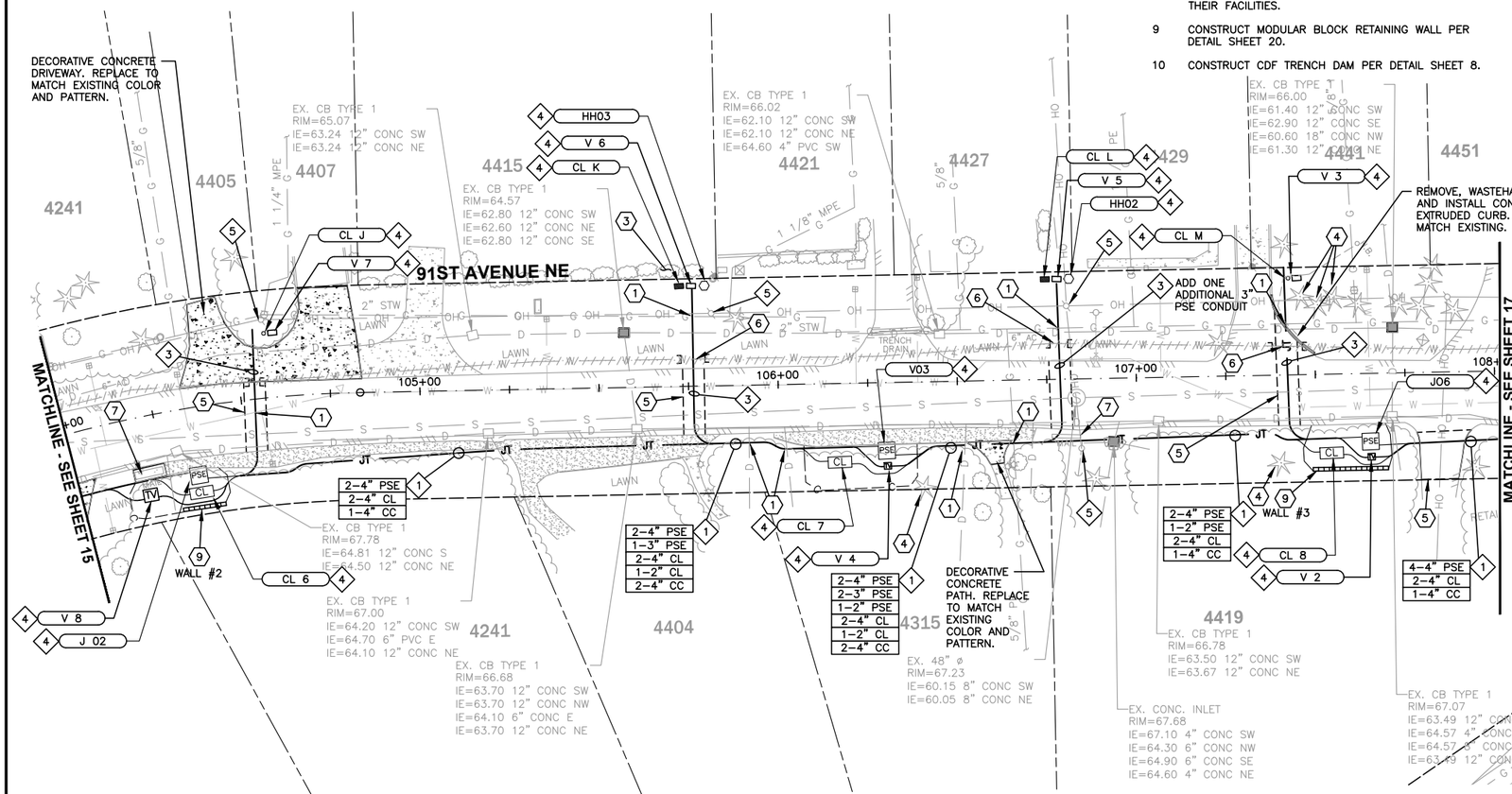

CONSTRUCTION NOTES

1. CAUTION: POTENTIAL UTILITY CONFLICT. VERIFY (POTHOLE) EXACT LOCATION AND DEPTH OF EXISTING UTILITY. SEE ORDER OF WORK.
2. DENSE VEGETATION: CLEAR AND GRUB EXISTING BRUSH, SHRUBS, AND/OR TURF AS NEEDED TO INSTALL FACILITIES.
3. CLEAR AND GRUB EXISTING TREE.
4. PROTECT EXISTING FENCE, WALL, TREE, AND LANDSCAPING, DURING CONSTRUCTION.
5. SAWCUT EXISTING PAVEMENT AND SEAL JOINT (WHERE APPLICABLE) THEN APPLY SAND BLANKET TO THE SURFACE JOINT.
6. ABANDONED EXISTING AC WATER MAIN. CONTRACTOR MAY REMOVE EX. AC WATER MAIN AS NEEDED TO INSTALL FACILITIES. EX. AC WATER MAIN SHALL THEN BE PLUGGED (BOTH SIDES).
7. REMOVE, PROTECT AND REINSATLL EXISTING MAILBOX PAGODA ON NEW CONCRETE PIER BLOCKS. REMOVE AND WASTEHAUL EXISTING CONCRETE PAD.
8. EXISTING WATER SERVICE LINE(S) SHALL BE CUT, REALIGNED AND RECONNECTED TO ACCOMMODATE THE NEW UTILITY STRUCTURES AND CONDUITS. COORDINATE WITH CITY OF BELLEVUE ANY WORK THAT EXPOSES THEIR FACILITIES.
9. CONSTRUCT MODULAR BLOCK RETAINING WALL PER DETAIL SHEET 20.
10. CONSTRUCT CDF TRENCH DAM PER DETAIL SHEET 8.

GENERAL NOTES

1. SEE SPECIFICATIONS FOR PSE, COMCAST AND CENTURYLINK PLANS FOR ADDITIONAL CONDUIT AND STRUCTURE INFORMATION.
2. EXISTING OVERHEAD AND UNDERGROUND UTILITIES SHALL REMAIN IN USE UNTIL THE NEW UNDERGROUND SYSTEM IS COMPLETED AND ACCEPTED BY THE UTILITY COMPANIES. COORDINATE THE SWITCH OVERS WITH THE UTILITY COMPANIES.

20' 10' 0 20' 40'
SCALE: 1"=20'

JOINT UTILITY TRENCH CONSTRUCTION NOTES

1. CONSTRUCT JOINT UTILITY TRENCH PER DETAIL SHEET 19. INSTALL UTILITY FURNISHED CONDUIT PER PSE, COMCAST AND CENTURYLINK PLANS.
2. CONSTRUCT COMBINED STORM/JOINT UTILITY TRENCH PER DETAIL SHEET 19. INSTALL CONTRACTOR PROVIDED STORM PIPE AND UTILITY FURNISHED CONDUIT.
3. CONSTRUCT JOINT SERVICE TRENCH PER DETAIL SHEET 19. INSTALL UTILITY FURNISHED CONDUIT PER PSE, COMCAST AND CENTURYLINK PLANS.
4. EXCAVATE, INSTALL AND BACKFILL UTILITY FURNISHED VAULT, HANDHOLE, JUNCTION BOX, AND/OR STRUCTURE PER PSE, COMCAST AND CENTURYLINK PLANS. SEE UTILITY STRUCTURE NOTES.
5. EXISTING FACILITY TO BE REMOVED BY OTHERS. COORDINATE WORK WITH UTILITY COMPANIES.

UTILITY STRUCTURE SCHEDULE

ID	STATION	OFFSET		EL. (±)	STRUCTURE DESCRIPTION
PSE					
J02	104+35.0	19.0'	RT	68.4'	VAULT, 504 J-BOX
HH03	105+79.9	28.0'	LT	63.7'	HANDHOLE, CONCRETE 3030
V03	106+30.0	19.0'	RT	68.1'	VAULT, 507 TUT
HH02	106+81.4	28.0'	LT	64.0'	HANDHOLE, CONCRETE 3030
J06	107+65.1	19.0'	RT	67.8'	VAULT, 504 J-BOX
COMCAST (CC)					
V 8	104+19.9	22.0'	RT	68.4'	VAULT, 3642-LA
V 7	104+60.3	18.0'	LT	65.8'	VAULT, SGLB 1730
V 6	105+76.2	28.0'	LT	63.7'	VAULT, SGLB 1730
V 4	106+30.2	23.3'	RT	68.1'	VAULT, SGLB 1730
V 5	106+78.3	28.0'	LT	64.0'	VAULT, SGLB 1730
V 3	107+45.3	27.0'	LT	64.0'	VAULT, SGLB 1730
V 2	107+65.4	23.3'	RT	67.8'	VAULT, SGLB 1730
CENTURYLINK (CL)					
CL 6	104+35.0	23.9'	RT	68.4'	VAULT, 264-TA
CL J	104+58.0	18.0'	LT	65.9'	JUNCTION BOX, FLOWERPOT
CL K	105+72.9	28.0'	LT	63.7'	HANDHOLE, 1730
CL 7	106+16.9	22.0'	RT	68.1'	VAULT, 264-TA
CL L	106+75.0	28.0'	LT	64.0'	HANDHOLE, 1730
CL M	107+42.9	27.0'	LT	64.0'	JUNCTION BOX, FLOWERPOT
CL 8	107+54.2	22.0'	RT	67.8'	VAULT, 264-TA

RETAINING WALL INFORMATION

WALL #	START OF WALL				END OF WALL			
	LOCATION		ELEVATION		LOCATION		ELEVATION	
	STATION (±)	OFFSET (±)	BASE EL.	TOP EL.	STATION (±)	OFFSET (±)	BASE EL.	TOP EL.
2	104+28.7	27.5' RT	67.9'	69.6'	104+40.7	27.5' RT	67.9'	70.2'
3	107+48.9	26.0' RT	67.2'	69.6'	107+69.9	26.0' RT	67.2'	69.5'

UTILITY STRUCTURE NOTES

1. STRUCTURE LOCATIONS SHALL BE MARKED IN THE FIELD AND APPROVED BY THE UTILITY OWNER PRIOR TO EXCAVATION. THE CONTRACTOR SHALL NOTIFY UTILITY COMPANIES A MINIMUM OF ONE (1) WEEK PRIOR TO MARKING THE LOCATIONS.
2. SIZE AND DEPTH OF EXCAVATION FOR CENTURYLINK AND COMCAST HANDHOLE AND VAULTS SHALL BE EQUAL TO THE LENGTH, WIDTH AND HEIGHT OF STRUCTURE PLUS 6". (SEE SPECIFICATIONS FOR STRUCTURE DIMENSIONS AND DETAILS). PLACE STRUCTURE ON 6" COMPACTED CRUSHED SURFACING TOP COURSE PAD.
3. SIZE AND DEPTH OF EXCAVATION FOR PSE STRUCTURES SHALL CONFORM TO PSE PLANS.

BURIED UTILITIES IN AREA CALL BEFORE YOU DIG
1-800-424-5555
EXISTING UTILITIES SHOWN ARE FROM THE BEST AVAILABLE INFORMATION AND NO GUARANTEE IS MADE AS TO THE EXACT SIZE, TYPE, LOCATION OR DEPTH

DISCLAIMER

THE SURVEY INFORMATION FOR RIGHT-OF-WAY AND TOPOGRAPHIC DATA SHOWN HEREON WAS PERFORMED BY GROUP 4 (2011) AND PACE (2014). THE PROPERTY LINES AND STREET RIGHT-OF-WAY SHOWN HEREON ARE BASED ON INFORMATION OF PUBLIC RECORDS, NOT ON A SURVEYED LOCATION.

APPROVAL FOR CONSTRUCTION

BY: TOWN OF YARROW POINT

DATE: _____

APPROVAL EXPIRES: _____

0 1" 2"
TWO INCHES AT FULL SCALE. IF NOT, SCALE ACCORDINGLY

Gray & Osborne, Inc.
CONSULTING ENGINEERS
3710 168TH STREET NE, BLDG. B, SUITE 210
ARLINGTON, WA 98223 • (360) 454-5490

DATE: AUG 2020
DRAWN: C.J.B.
CHECKED: K.W.B.
APPROVED: R.W.K

No.	REVISION	DATE	APPD

KEVIN W. BROWN — STATE OF WASHINGTON — 35198 — REGISTERED PROFESSIONAL ENGINEER

ROGER W. KUYKENDALL — STATE OF WASHINGTON — 35168 — REGISTERED PROFESSIONAL ENGINEER

TOWN OF YARROW POINT
KING COUNTY WASHINGTON
NE 42ND STREET/91ST AVENUE NE STORMWATER & UGC PROJECT
JOINT UTILITY TRENCH PLAN

SHEET: 16
OF: 21

JOB NO.: 19456
DWG: UGC PLAN

M:\Yarrow Point\19456.00 42nd St - 91st Ave Storm\01 Design\PLANSET\Civil\UGC PLAN.dwg, 8/6/2020 6:12 PM, KEVIN BROWN

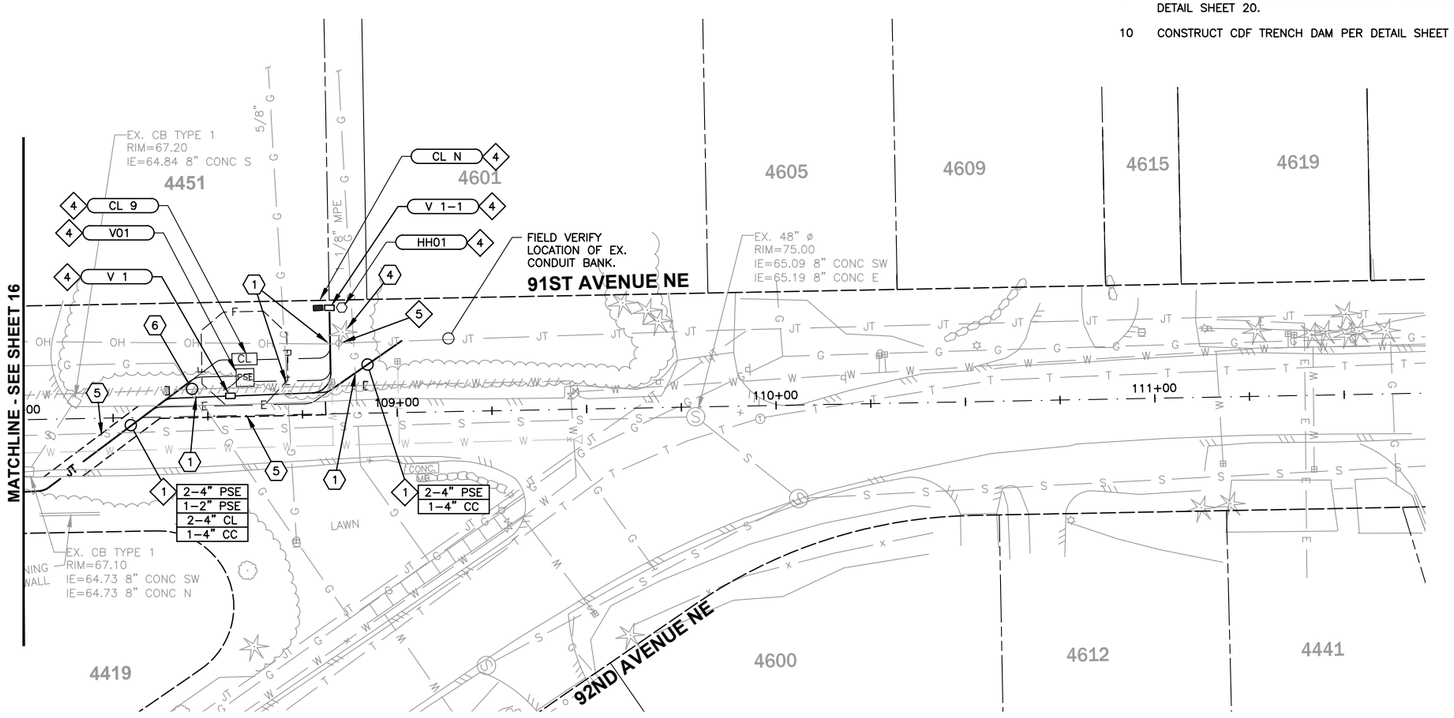

CONSTRUCTION NOTES

1. CAUTION: POTENTIAL UTILITY CONFLICT. VERIFY (POTHOLE) EXACT LOCATION AND DEPTH OF EXISTING UTILITY. SEE ORDER OF WORK.
2. DENSE VEGETATION: CLEAR AND GRUB EXISTING BRUSH, SHRUBS, AND/OR TURF AS NEEDED TO INSTALL FACILITIES.
3. CLEAR AND GRUB EXISTING TREE.
4. PROTECT EXISTING FENCE, WALL, TREE, AND LANDSCAPING, DURING CONSTRUCTION.
5. SAWCUT EXISTING PAVEMENT AND SEAL JOINT (WHERE APPLICABLE) THEN APPLY SAND BLANKET TO THE SURFACE JOINT.
6. ABANDONED EXISTING AC WATER MAIN. CONTRACTOR MAY REMOVE EX. AC WATER MAIN AS NEEDED TO INSTALL FACILITIES. EX. AC WATER MAIN SHALL THEN BE PLUGGED (BOTH SIDES).
7. REMOVE, PROTECT AND REINSATLL EXISTING MAILBOX PAGODA ON NEW CONCRETE PIER BLOCKS. REMOVE AND WASTEHAUL EXISTING CONCRETE PAD.
8. EXISTING WATER SERVICE LINE(S) SHALL BE CUT, REALIGNED AND RECONNECTED TO ACCOMMODATE THE NEW UTILITY STRUCTURES AND CONDUITS. COORDINATE WITH CITY OF BELLEVUE ANY WORK THAT EXPOSES THEIR FACILITIES.
9. CONSTRUCT MODULAR BLOCK RETAINING WALL PER DETAIL SHEET 20.
10. CONSTRUCT CDF TRENCH DAM PER DETAIL SHEET 8.

GENERAL NOTES

1. SEE SPECIFICATIONS FOR PSE, COMCAST AND CENTURYLINK PLANS FOR ADDITIONAL CONDUIT AND STRUCTURE INFORMATION.
2. EXISTING OVERHEAD AND UNDERGROUND UTILITIES SHALL REMAIN IN USE UNTIL THE NEW UNDERGROUND SYSTEM IS COMPLETED AND ACCEPTED BY THE UTILITY COMPANIES. COORDINATE THE SWITCH OVERS WITH THE UTILITY COMPANIES.

20' 10' 0 20' 40'
SCALE: 1"=20'

JOINT UTILITY TRENCH CONSTRUCTION NOTES

1. CONSTRUCT JOINT UTILITY TRENCH PER DETAIL SHEET 19. INSTALL UTILITY FURNISHED CONDUIT PER PSE, COMCAST AND CENTURYLINK PLANS.
2. CONSTRUCT COMBINED STORM/JOINT UTILITY TRENCH PER DETAIL SHEET 19. INSTALL CONTRACTOR PROVIDED STORM PIPE AND UTILITY FURNISHED CONDUIT.
3. CONSTRUCT JOINT SERVICE TRENCH PER DETAIL SHEET 19. INSTALL UTILITY FURNISHED CONDUIT PER PSE, COMCAST AND CENTURYLINK PLANS.
4. EXCAVATE, INSTALL AND BACKFILL UTILITY FURNISHED VAULT, HANDHOLE, JUNCTION BOX, AND/OR STRUCTURE PER PSE, COMCAST AND CENTURYLINK PLANS. SEE UTILITY STRUCTURE NOTES.
5. EXISTING FACILITY TO BE REMOVED BY OTHERS. COORDINATE WORK WITH UTILITY COMPANIES.

UTILITY STRUCTURE SCHEDULE

ID	STATION	OFFSET		EL. (±)	STRUCTURE DESCRIPTION
PSE					
V01	108+60.0	10.0'	LT	69.0'	VAULT, 507 TUT
HH01	108+85.9	28.0'	LT	65.4'	HANDHOLE, CONCRETE 3030
COMCAST (CC)					
V 1	108+56.1	5.2'	LT	69.0'	VAULT, SGLB 1730
V 1-1	108+82.6	28.0'	LT	65.4'	VAULT, SGLB 1730
CENTURYLINK (CL)					
CL 9	108+59.9	14.9'	LT	69.0'	HANDHOLE, 1730
CL N	108+79.6	28.0'	LT	65.4'	HANDHOLE, 1730

UTILITY STRUCTURE NOTES

1. STRUCTURE LOCATIONS SHALL BE MARKED IN THE FIELD AND APPROVED BY THE UTILITY OWNER PRIOR TO EXCAVATION. THE CONTRACTOR SHALL NOTIFY UTILITY COMPANIES A MINIMUM OF ONE (1) WEEK PRIOR TO MARKING THE LOCATIONS.
2. SIZE AND DEPTH OF EXCAVATION FOR CENTURYLINK AND COMCAST HANDHOLE AND VAULTS SHALL BE EQUAL TO THE LENGTH, WIDTH AND HEIGHT OF STRUCTURE PLUS 6". (SEE SPECIFICATIONS FOR STRUCTURE DIMENSIONS AND DETAILS). PLACE STRUCTURE ON 6" COMPACTED CRUSHED SURFACING TOP COURSE PAD.
3. SIZE AND DEPTH OF EXCAVATION FOR PSE STRUCTURES SHALL CONFORM TO PSE PLANS.

DISCLAIMER

THE SURVEY INFORMATION FOR RIGHT-OF-WAY AND TOPOGRAPHIC DATA SHOWN HEREON WAS PERFORMED BY GROUP 4 (2011) AND PACE (2014). THE PROPERTY LINES AND STREET RIGHT-OF-WAY SHOWN HEREON ARE BASED ON INFORMATION OF PUBLIC RECORDS, NOT ON A SURVEYED LOCATION.

BURIED UTILITIES IN AREA
CALL BEFORE YOU DIG
1-800-424-5555
EXISTING UTILITIES SHOWN ARE FROM THE BEST AVAILABLE INFORMATION AND NO GUARANTEE IS MADE AS TO THE EXACT SIZE, TYPE, LOCATION OR DEPTH

APPROVAL FOR CONSTRUCTION

BY: TOWN OF YARROW POINT

DATE: _____

APPROVAL EXPIRES: _____

0 1" 2"
TWO INCHES AT FULL SCALE. IF NOT, SCALE ACCORDINGLY

Gray & Osborne, Inc.
CONSULTING ENGINEERS
3710 168TH STREET NE, BLDG. B, SUITE 210
ARLINGTON, WA 98223 • (360) 454-5490

DATE: AUG 2020
DRAWN: C.J.B.
CHECKED: K.W.B.
APPROVED: R.W.K

No.	REVISION	DATE	APPD

KEVIN W. BROWN — STATE OF WASHINGTON — 35168 — REGISTERED PROFESSIONAL ENGINEER

ROGER W. KUYKENDALL — STATE OF WASHINGTON — 35168 — REGISTERED PROFESSIONAL ENGINEER

TOWN OF YARROW POINT
WASHINGTON
KING COUNTY
NE 42ND STREET/91ST AVENUE NE STORMWATER & UGC PROJECT
JOINT UTILITY TRENCH PLAN

SHEET: 17
OF: 21

JOB NO.: 19456
DWG: UGC PLAN

M:\Yarrow Point\19456.00 42nd St - 91st Ave Storm\01 Design\PLANSET\Civil\UGC PLAN.dwg, 8/6/2020 6:12 PM, KEVIN BROWN

PSE - PRIMARY				
LOCATION		CONDUIT		
		SIZE	# OF	DISTANCE (APPROX.)
SOURCE	DESTINATION	(IN)	CONDUITS	(FT)
IP01	J06	2	1	146
V01	J06	4	2	100
J06	IP02	2	1	65
J06	V03	4	2	130
J06	J02	4	2	330
J02	IP04	2	1	108
J02	J03	4	2	131
J02	IP03	2	1	63
J03	V07	2	1	5
J03	IP05	2	1	86
J03	J04	4	2	250
J04	IP07	4	2	190
J04	V08	4	2	80
J04	V09	4	2	395
J04	V10	4	2	570

PSE - SECONDARY				
LOCATION		CONDUIT		
		SIZE	# OF	DISTANCE (APPROX.)
SOURCE	DESTINATION	(IN)	CONDUITS	(FT)
V01	HH01	3	1	38
V03	P03A	3	1	160
V03	HH02	3	1	92
V03	HH03	3	1	94
V08	HH04	3	1	210
V08	HH05	3	1	198
V08	HH06	3	1	46
V08	HH07	3	1	125
V08	HH08	3	1	184
V09	HH09	3	1	172
V09	HH10	3	1	20
V09	HH11	3	1	15
V09	HH12	3	1	90
V10	HH13	3	1	40

CENTURYLINK (CL)				
LOCATION		CONDUIT		
		SIZE	# OF	DISTANCE (APPROX.)
SOURCE	DESTINATION	(IN)	CONDUITS	(FT)
CL 9	CL N	2	1	30
CL 9	CL 8	4	2	114
CL 8	CL M	2	1	56
CL 8	CL 7	4	2	138
CL 7	CL L	2	1	108
CL L	EXISTING	2	1	10
CL 7	CL K	2	1	82
CL 7	CL 6	4	2	176
CL 6	CL J	2	1	53
CL 6	CL I	2	1	98
CL 6	CL 5	4	2	184
CL 5	CL H	2	1	80
CL 5	CL 1	4	2	200
CL 1	EXISTING	4	1	192
CL 1	CL A	2	1	170
CL 1	CL 2	4	1	76
CL 1	CL B	2	1	108
CL 2	CL C	2	1	135
CL 2	CL D	2	1	200
CL 1	CL D	2	1	241
CL 2	CL 3	4	1	340
CL 3	CL F	2	1	21
CL 3	CL G	2	1	136
CL 3	CL 4	4	1	189
CL 4	EXISTING	2	1	74

COMCAST (CC)				
LOCATION		CONDUIT		
		SIZE	# OF	DISTANCE (APPROX.)
SOURCE	DESTINATION	(IN)	CONDUITS	(FT)
V 1	EXISTING	4	1	50
V 1	HH 1	4	1	46
V 1	V 2	4	1	98
V 2	HH 2	4	1	68
V 2	V 3	4	1	137
V 3	V 4	4	1	94
V 3	V5	4	1	100
V 3	V 8	4	1	212
V 8	V 7	4	1	72
V 8	V 9	4	1	84
V 8	V 10	4	1	182
V 10	V 11	4	1	90
V 10	V 12	4	1	290
V 12	V 13	4	1	203
V 13	V 22	4	1	50
V 12	V 14	4	1	36
V 12	V 15	4	1	115
V 12	V 17	4	1	183
V 17	V 16	4	1	31
V 12	V 18	4	1	338
V 18	V 19	4	1	16
V 18	V 21	4	1	22
V 18	V 23	4	1	118

BURIED UTILITIES IN AREA
CALL BEFORE YOU DIG
1-800-424-5555
EXISTING UTILITIES SHOWN ARE FROM THE BEST AVAILABLE INFORMATION AND NO GUARANTEE IS MADE AS TO THE EXACT SIZE, TYPE, LOCATION OR DEPTH

APPROVAL FOR CONSTRUCTION

BY: TOWN OF YARROW POINT

DATE: _____

APPROVAL EXPIRES: _____

0 1" 2"
TWO INCHES AT FULL SCALE.
IF NOT, SCALE ACCORDINGLY

Gray & Osborne, Inc.
CONSULTING ENGINEERS
3710 168TH STREET NE, BLDG. B, SUITE 210
ARLINGTON, WA 98223 • (360) 454-5490

DATE: AUG 2020
DRAWN: C.J.B.
CHECKED: K.W.B.
APPROVED: R.W.K

No.	REVISION	DATE	APPD

KEVIN W. BROWN — STATE OF WASHINGTON — 45895 — REGISTERED PROFESSIONAL ENGINEER

ROGER W. KUYKENDALL — STATE OF WASHINGTON — 45895 — REGISTERED PROFESSIONAL ENGINEER

TOWN OF YARROW POINT
WASHINGTON
KING COUNTY
NE 42ND STREET/91ST AVENUE NE
STORMWATER & UGC PROJECT
CONDUIT TABLES

SHEET: 18
OF: 21

JOB NO.: 19456
DWG: DETAILS

M:\Yarrow Point\19456.00 42nd St - 91st Ave Storm\01 Design\PLANSET\Civil\DETAILS.dwg, 8/6/2020 6:12 PM, KEVIN BROWN

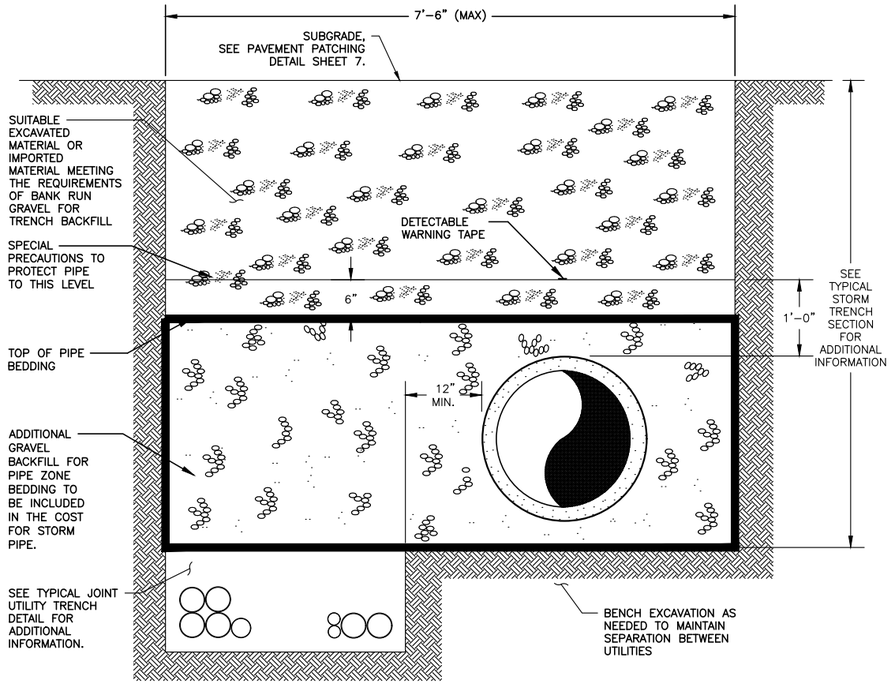

COMBINED STORM/JOINT UTILITY TRENCH
APPROX. STA 11+45 TO APPROX. STA 16+20

NOT TO SCALE

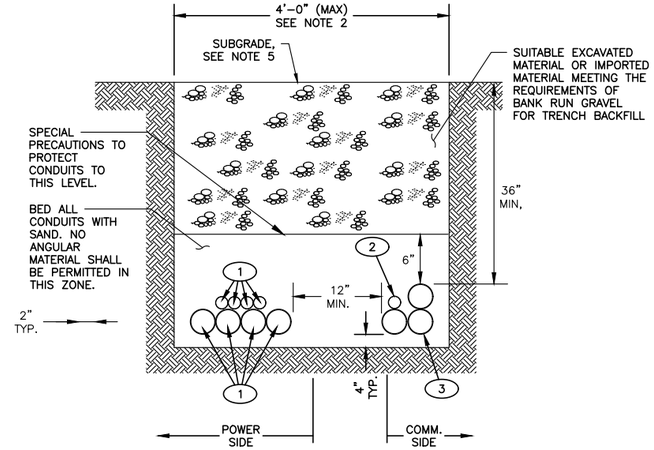

NOTES:

1. THE TRENCH SECTION SHOWN IS FOR THE PAYMENT LIMITS FOR BANK RUN GRAVEL FOR TRENCH BACKFILL.
2. NUMBER AND SIZE OF CONDUITS AND THE TRENCH WIDTH AND DEPTH VARIES. SEE JOINT UTILITY TRENCH PLANS.
3. EACH UTILITY WILL MAKE ALL CONNECTIONS TO EXISTING/NEW FACILITIES. THE CONTRACTOR SHALL COORDINATE THIS WORK.
4. WORK SHALL BE SEQUENCED TO ALLOW CONTINUAL OPERATION OF ALL EXISTING UNDERGROUND AND AERIAL UTILITIES UNTIL CONVERSIONS ARE COMPLETE.
5. SEE PAVEMENT PATCHING DETAIL SHEET 7 FOR TRENCHES LOCATED WITHIN PAVEMENT. FOR TRENCHES NOT LOCATED WITHIN THE PAVEMENT, RESTORE THE SURFACE WITH 4 INCHES OF TOPSOIL, BARK MULCH OR GRASS SOD.

JOINT UTILITY TRENCH

NOT TO SCALE

CONDUIT CALLOUTS

1. CONDUIT(S) FOR PSE. CONDUIT AND SWEEPS WILL BE FURNISHED BY PSE AND INSTALLED BY THE CONTRACTOR.
2. CONDUIT(S) FOR CENTURYLINK. CONDUIT AND SWEEPS WILL BE FURNISHED BY CENTURYLINK AND INSTALLED BY THE CONTRACTOR.
3. CONDUIT(S) FOR COMCAST. CONDUIT AND SWEEPS SHALL BE FURNISHED BY COMCAST AND INSTALLED BY THE CONTRACTOR.

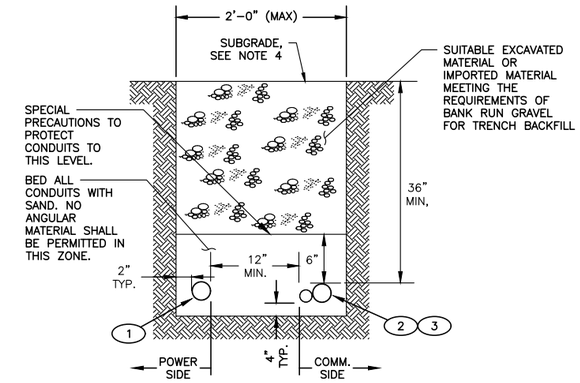

NOTES:

1. THE TRENCH SECTION SHOWN IS FOR THE PAYMENT LIMITS FOR BANK RUN GRAVEL FOR TRENCH BACKFILL.
2. EACH UTILITY WILL MAKE ALL CONNECTIONS TO EXISTING/NEW FACILITIES. THE CONTRACTOR SHALL COORDINATE THIS WORK.
3. WORK SHALL BE SEQUENCED TO ALLOW CONTINUAL OPERATION OF ALL EXISTING UNDERGROUND AND AERIAL UTILITIES UNTIL CONVERSIONS ARE COMPLETE.
5. SEE PAVEMENT PATCHING DETAIL SHEET 7 FOR TRENCHES LOCATED WITHIN PAVEMENT. FOR TRENCHES NOT LOCATED WITHIN THE PAVEMENT, RESTORE THE SURFACE WITH 4 INCHES OF TOPSOIL, BARK MULCH OR GRASS SOD.

JOINT SERVICE TRENCH

NOT TO SCALE

BURIED UTILITIES IN AREA
CALL BEFORE YOU DIG
1-800-424-5555
EXISTING UTILITIES SHOWN ARE FROM THE BEST AVAILABLE INFORMATION AND NO GUARANTEE IS MADE AS TO THE EXACT SIZE, TYPE, LOCATION OR DEPTH

APPROVAL FOR CONSTRUCTION

BY: TOWN OF YARROW POINT

DATE: _____

APPROVAL EXPIRES: _____

0 1" 2"
TWO INCHES AT FULL SCALE. IF NOT, SCALE ACCORDINGLY

Gray & Osborne, Inc.
CONSULTING ENGINEERS
3710 168TH STREET NE, BLDG. B, SUITE 210
ARLINGTON, WA 98223 • (360) 454-5490

DATE: AUG 2020	
DRAWN: C.J.B.	
CHECKED: K.W.B.	
APPROVED: R.W.K	

No.	REVISION	DATE	APPD

KEVIN W. BROWN — STATE OF WASHINGTON — 36189 — REGISTERED PROFESSIONAL ENGINEER

ROGER W. KUYKENDALL — STATE OF WASHINGTON — 35188 — REGISTERED PROFESSIONAL ENGINEER

TOWN OF YARROW POINT
KING COUNTY WASHINGTON
NE 42ND STREET/91ST AVENUE NE STORMWATER & UGC PROJECT
JOINT TRENCH DETAILS

SHEET: 19
OF: 21

JOB NO.: 19456
DWG: DETAILS

M:\Yarrow Point\19456.00 42nd St - 91st Ave Storm\01 Design\PLANSET\Civil\DETAILS.dwg, 8/6/2020 6:12 PM, KEVIN BROWN

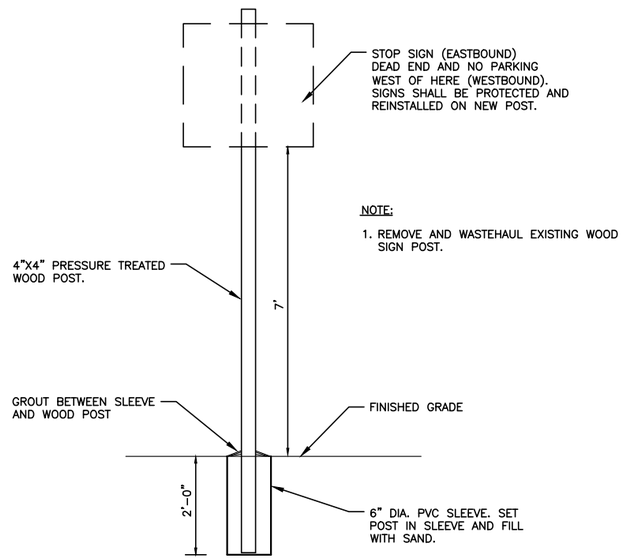

NOTE:

1. REMOVE AND WASTEHAUL EXISTING WOOD SIGN POST.

SIGN INSTALLATION DETAIL

NTS

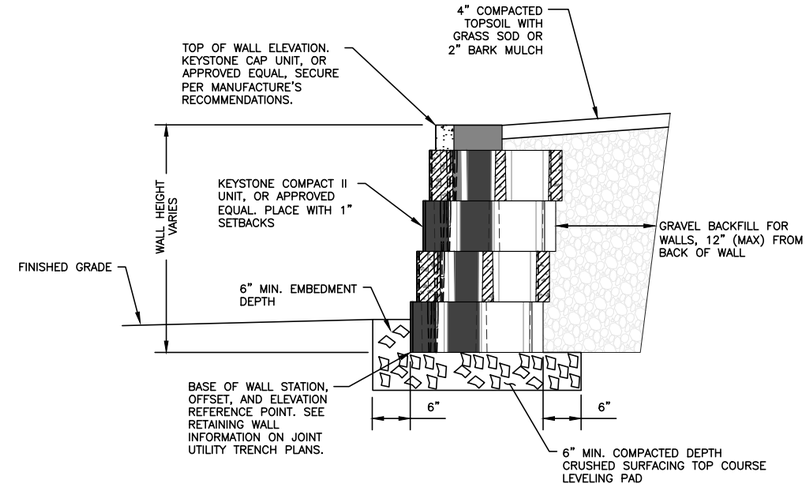

NOTES

1. INSTALL UNIT BACKFILL AND GEOGRID REINFORCEMENT PER THE MANUFACTURER'S RECOMMENDATIONS. BACKFILL SHALL BE PLACED AND COMPACTED IN WALL UNIT CORE.

MODULAR BLOCK WALL DETAIL

NTS

BURIED UTILITIES IN AREA
CALL BEFORE YOU DIG
1-800-424-5555
EXISTING UTILITIES SHOWN ARE FROM THE BEST AVAILABLE INFORMATION AND NO GUARANTEE IS MADE AS TO THE EXACT SIZE, TYPE, LOCATION OR DEPTH

APPROVAL FOR CONSTRUCTION

BY: TOWN OF YARROW POINT

DATE: _____

APPROVAL EXPIRES: _____

0 1" 2"

TWO INCHES AT FULL SCALE.
IF NOT, SCALE ACCORDINGLY

Gray & Osborne, Inc.
CONSULTING ENGINEERS
3710 168TH STREET NE, BLDG. B, SUITE 210
ARLINGTON, WA 98223 • (360) 454-5490

DATE: AUG 2020	
DRAWN: C.J.B.	
CHECKED: K.W.B.	
APPROVED: R.W.K	

No.	REVISION	DATE	APPD

KEVIN W. BROWN — STATE OF WASHINGTON — 38319 — REGISTERED PROFESSIONAL ENGINEER

ROGER W. KUYKENDALL — STATE OF WASHINGTON — 35188 — REGISTERED PROFESSIONAL ENGINEER

TOWN OF YARROW POINT
KING COUNTY WASHINGTON
NE 42ND STREET/91ST AVENUE NE STORMWATER & UGC PROJECT
CONSTRUCTION DETAILS

SHEET: **20**
OF: **21**

JOB NO.: 19456
DWG: DETAILS

M:\Yarrow Point\19456.00 42nd St - 91st Ave Storm\01 Design\PLANSET\Civil\DETAILS.dwg, 8/6/2020 6:12 PM, KEVIN BROWN

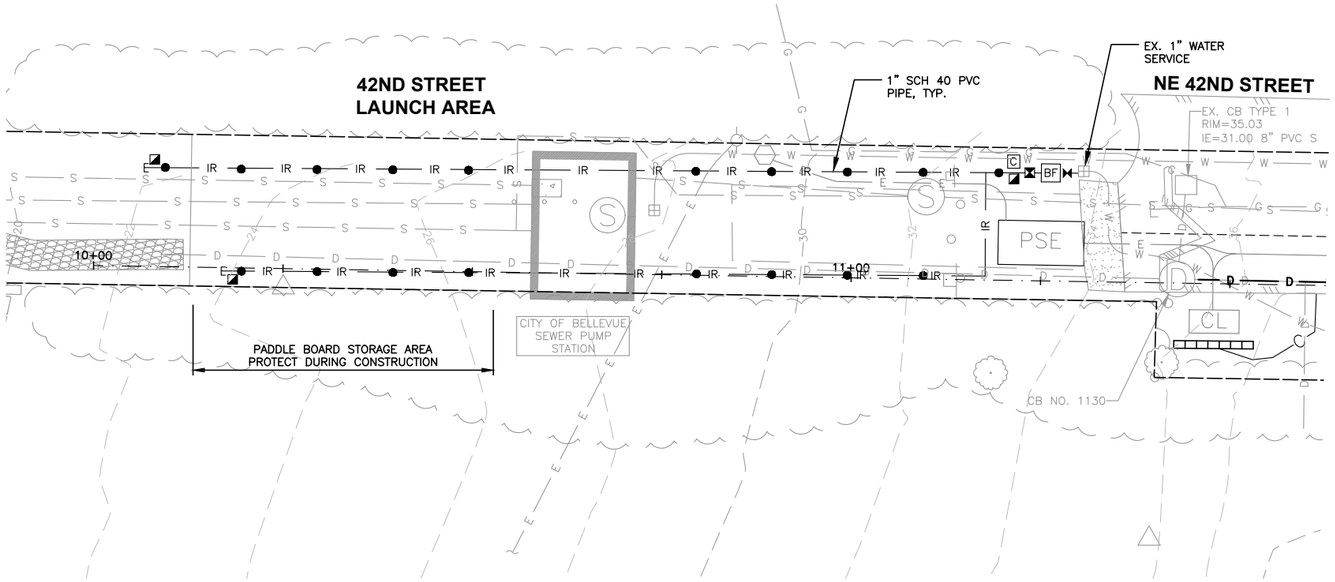

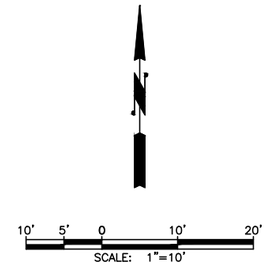

MANUFACTURER/MODEL/DESCRIPTION

- TORO EZ-FLO WITH DC LATCHING SOLENOID DZK-EZF-20-04, OR OWNER APPROVED EQUAL.
- BF — DOUBLE CHECK BACKFLOW PREVENTION, SEE CITY OF BELLEVUE DETAIL, THIS SHEET.
- C — TORO DDCWP-8-9V BATTERY OPERATED CONTROLLER, 8 STATIONS, OUTDOOR MODEL, COMMERCIAL USE, OR OWNER APPROVED EQUAL. INSTALL IN METER BOX, CARSON TRUSS-T 1015, OR OWNER APPROVED EQUAL.
- SHUT OFF VALVE, MUELLER OR OWNER APPROVED EQUAL
- MANUAL DRAIN, PER DETAIL, THIS SHEET
- SPRAY HEAD, TORO 570Z-4P PRX OR OWNER APPROVED EQUAL

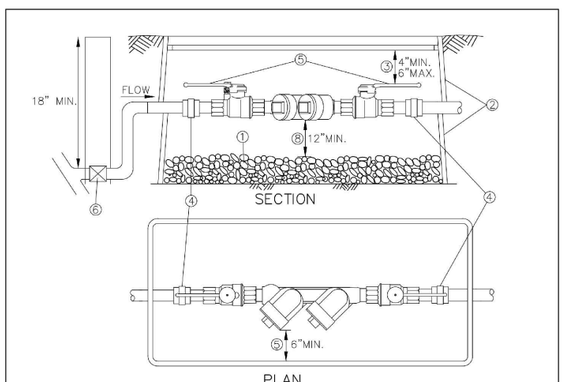

① 1" ROUND WASHED GRAVEL BY 6" DEEP ON BOTTOM OF BOX
② ENCLOSE 2" & SMALLER D.C.V.A. IN TWO METER BOXES STACKED ON TOP OF EACH OTHER OR, OVERSIZED BOX. MUST HAVE REMOVABLE COVER. BOXES TO BE LOCATED IN SIDEWALK AND AREAS WITH VEHICULAR TRAFFIC SHALL BE METAL, EQUAL TO OLYMPIC FOUNDRY SM30. BOXES IN OTHER NON-TRAFFIC AREAS TO BE CARSON INDUSTRIES 1730-18 BCFXL METER BOX WITH 1730 COVER.
③ MAXIMUM OF 6" DISTANCE BETWEEN UNDERSIDE OF LID AND HIGHEST POINT OF DEVICE.
④ (2) UNIONS.
⑤ WHEN TEST-COCKS ARE FACING SIDEWAYS THERE MUST BE A 6" MIN. CLEARANCE BETWEEN THEM AND SIDE OF BOX.
⑥ PER PLUMBING CODE REQUIREMENT, IRRIGATION SYSTEMS MUST HAVE SHUT OFF INSTALLED AS SHOWN. FEMALE FITTINGS ARE PROHIBITED IN CONJUNCTION WITH METALLIC MALE FITTINGS.

NOTES:
1. ALL INSTALLATIONS MUST MEET MINIMUM STANDARDS OF THE UNIFORM PLUMBING CODE AND WSDOH APPROVED INSTALLATIONS LIST.
2. TESTING IS REQUIRED BY A WASHINGTON STATE DEPARTMENT OF HEALTH CERITFIED BACKFLOW ASSEMBLY TESTER UPON INSTALLATION AND ANNUALLY THEREAFTER. ASSEMBLY TO BE MAINTAINED BY OWNER.

City of Bellevue — WATER UTILITY

TITLE 1" TO 2" DOUBLE CHECK VALVE ASSEMBLY FOR IRRIGATION SYSTEMS (OUTSIDE INSTALLATION)

JANUARY 2018 — NO SCALE — NO. W-36

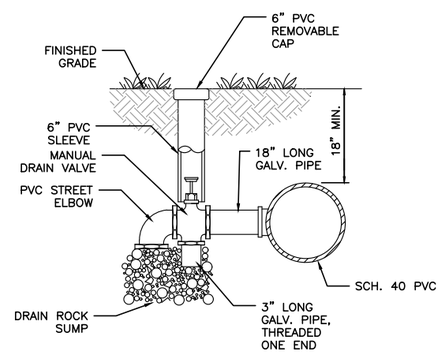

MANUAL DRAIN DETAIL
NTS

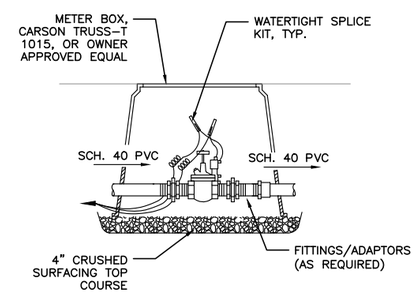

MASTER VALVE AND SOLENOID DETAIL
NTS

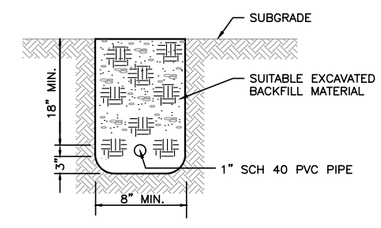

WATER SERVICE TRENCH SECTION
NTS

BURIED UTILITIES IN AREA
CALL BEFORE YOU DIG
1-800-424-5555
EXISTING UTILITIES SHOWN ARE FROM THE BEST AVAILABLE INFORMATION AND NO GUARANTEE IS MADE AS TO THE EXACT SIZE, TYPE, LOCATION OR DEPTH

APPROVAL FOR CONSTRUCTION

BY: TOWN OF YARROW POINT

DATE: _____

APPROVAL EXPIRES: _____

0 — 1" — 2"
TWO INCHES AT FULL SCALE.
IF NOT, SCALE ACCORDINGLY

Gray & Osborne, Inc.
CONSULTING ENGINEERS
3710 168TH STREET NE, BLDG. B, SUITE 210
ARLINGTON, WA 98223 • (360) 454-5490

DATE: AUG 2020	
DRAWN: C.J.B.	
CHECKED: K.W.B.	
APPROVED: R.W.K	

No.	REVISION	DATE	APPD

KEVIN W. BROWN — STATE OF WASHINGTON — 38319 — REGISTERED PROFESSIONAL ENGINEER

ROGER W. KUYKENDALL — STATE OF WASHINGTON — 35188 — REGISTERED PROFESSIONAL ENGINEER

TOWN OF YARROW POINT
KING COUNTY WASHINGTON
NE 42ND STREET/91ST AVENUE NE STORMWATER & UGC PROJECT
IRRIGATION PLAN AND DETAILS

SHEET: 21
OF: 21

JOB NO.: 19456
DWG: IRRIGATION PLAN

M:\Yarrow Point\19456.00 42nd St - 91st Ave Storm\01 Design\PLANSET\Civil\IRRIGATION PLAN.dwg, 8/6/2020 6:13 PM, KEVIN BROWN